Colour combination - Linea

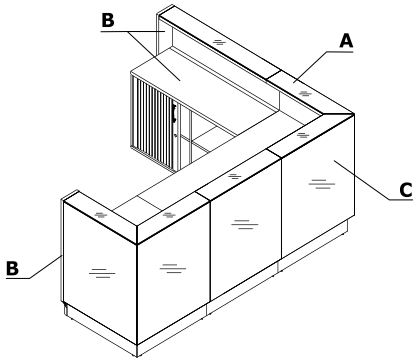

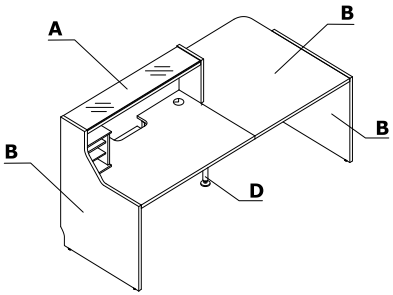

Material	Colour	All elements				Copmplementary elements									
		A - Upper top	B - Body	C - Front	D - Supporting leg	LMS05, LMS06, L2Z06	S69, E64								
MFC	08 - black					✓									
MFC	67 - white pastel					✓									
MFC	26 - aluminum satinato					✓									
Glass	116 - glass black - RAL 9005	✓	08 - black	✓											
Glass	117 - glass white - RAL 9003	✓	67 - white pastel	✓											
Glass	124 - glass silver - RAL 9007	✓	26 - aluminum satinato	✓											
Glass	134 - glass turquoise - NCS S 4050B20G			✓											
Glass	135 - glass yellow - RAL DESIGN 0908080			✓											
Glass	136 - glass pink - RAL DESIGN 3404045			✓											
Metal	M009 - aluminium semi-matt RAL 9006				✓		✓								
Metal	M015 - white semi-matt RAL 9010				✓		✓								
Metal	M115 - black semi-matt RAL 9005				✓		✓								