## Farbkombination - Linea

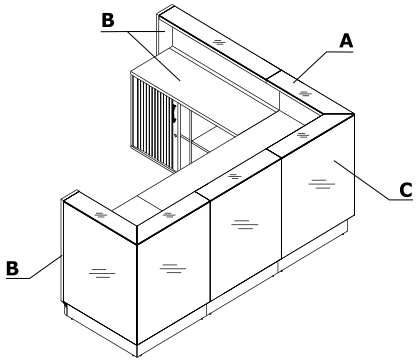


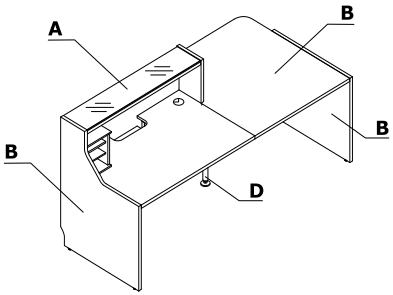


| Material | Farbe | Alle Elemente | | | | Ergänzungselemente | | | | | | | | | |
|---|---|---|---|---|---|---|---|---|---|---|---|---|---|---|---|
| | | A - Oberplatte | B - Korpus | C - Front | D - Stützfuß | LMS05, LMS06, L2Z06 | S69, E64 | | | | | | | | |
| Melamin | 08 - schwarz | | | | | ✓ | | | | | | | | | |
| Melamin | 67 - weiß Pastell | | | | | ✓ | | | | | | | | | |
| Melamin | 26 - aluminium satinato | | | | | ✓ | | | | | | | | | |
| Glas | 116 - Glas schwarz - RAL 9005 | ✓ | 08 - schwarz | ✓ | | | | | | | | | | | |
| Glas | 117 - Glas weiß - RAL 9003 | ✓ | 67 - weiß Pastell | ✓ | | | | | | | | | | | |
| Glas | 124 - Glas silbern - RAL 9007 | ✓ | 26 - aluminium satinato | ✓ | | | | | | | | | | | |
| Glas | 134 - Glas türkis - NCS S 4050B20G | | | ✓ | | | | | | | | | | | |
| Glas | 135 - Glas gelb - RAL DESIGN 0908080 | | | ✓ | | | | | | | | | | | |
| Glas | 136 - Glas pink - RAL DESIGN 3404045 | | | ✓ | | | | | | | | | | | |
| Metall | M009 - aluminium halbmatt RAL 9006 | | | | ✓ | | ✓ | | | | | | | | |
| Metall | M015 - weiß halbmatt RAL 9010 | | | | ✓ | | ✓ | | | | | | | | |
| Metall | M115 - schwarz halbmatt RAL 9005 | | | | ✓ | | ✓ | | | | | | | | |