OGI DRIVE BENCH

bench desk electric height adjustment

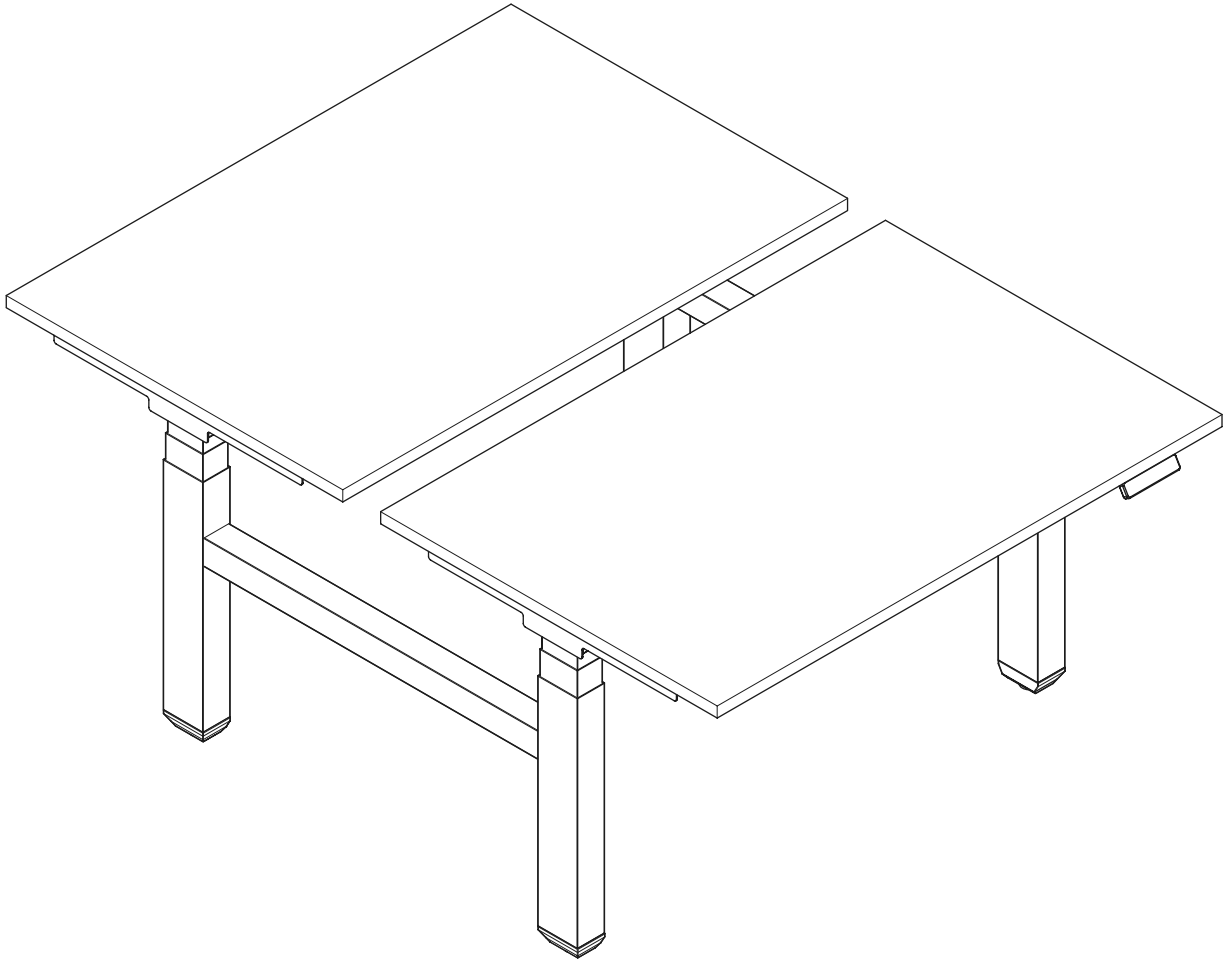

.mdd

disclaimers

Polski

UWAGA!
Przed rozpoczęciem montażu należy uważnie przeczytać instrukcję
i postępować zgodnie z jej zaleceniami. Instrukcję zachować na przyszłość. Do montażu używać wyłącznie sprawnych i odpowiednich narzędzi. W przypadku pytań lub wątpliwości prosimy
o kontakt.
Przed montażem sprawdzić zawartość paczek. Wszelkie uszkodzenia lub braki należy udokumentować i
sfotografować przed rozpoczęciem montażu. W przypadku reklamacji należy dołączyć zdjęcie etykiety
z opakowania.

Zeskanuj, aby zgłosić reklamację

English

WARNING!
Read the instruction manual before starting the assembly and follow them carefully. Keep the manual for future reference. Use only efficient and suitable tools. Contact us, if you have any questions or concerns.
Check the contents of the packages before assembly. Any damage or shortages must be documented and photographed before assembly. In case of a claim, attach a photo of the package label.

Scan to file a complaint

Deutsch

ACHTUNG!
Lesen Sie die Anleitung sorgfältig durch, bevor Sie mit der Installation beginnen, und befolgen Sie die Anweisungen. Bewahren Sie diese Anleitung zum späteren Nachschlagen auf. Verwenden Sie für die Montage nur effizientes und geeignetes Werkzeug. Bitte kontaktieren Sie uns, wenn Sie Fragen oder Bedenken haben.
Kontrollieren Sie den Inhalt der Pakete vor der Montage. Eventuelle Schäden oder Fehlmengen müssen vor dem Einbau dokumentiert und fotografiert werden. Im Falle einer Reklamation fügen Sie bitte ein Foto des Verpackungsetiketts bei.

Scannen, um eine Beschwerde einzureichen

Français

ATTENTION !
Lisez attentivement les instructions avant de commencer l'installation et suivez-les. Conservez ces instructions pour pouvoir vous y référer ultérieurement. N'utilisez que des outils efficaces et appropriés pour l'assemblage. Si vous avez des questions, n'hésitez pas à nous contacter.
Vérifiez le contenu des colis avant l'installation. Tout dommage ou manque doit être documenté et photographié avant l'installation. En cas de réclamation, veuillez joindre une photo de l'étiquette de l'emballage.

Numérisez pour déposer une plainte

Español

ATENCIÓN!
Lea atentamente las instrucciones antes de iniciar la instalación y siga las indicaciones. Conserve estas instrucciones para futuras consultas. Utilice únicamente herramientas eficaces y adecuadas para el montaje. Si tiene alguna duda o consulta, póngase en contacto con nosotros.
Compruebe el contenido de los paquetes antes de la instalación. Cualquier daño o falta debe documentarse y fotografiarse antes de la instalación. En caso de reclamación, adjunte una foto de la etiqueta del paquete.

Escanee para presentar una quejatar una queja

Italiano

ATTENZIONE !
Leggere attentamente le istruzioni prima di iniziare l'installazione e seguirle. Conservare queste istruzioni per riferimenti futuri. Per il montaggio, utilizzare solo strumenti efficienti e adatti. Se avete domande o dubbi, contattateci.
Controllare il contenuto delle confezioni prima dell'installazione. Eventuali danni o mancanze devono essere documentati e fotografati prima dell'installazione. In caso di reclamo, allegare una foto dell'etichetta della confezione.

Scansiona per presentare un reclamo

valid for

ODO612
ODO672
ODO614
ODO674
ODO616
ODO676
ODO618
ODO678
ODO620
ODO670
ODOK670
ODOK614
ODOK674
ODOK616
ODOK676
ODOK618
ODOK678
ODOK620
ODOKZ670
ODOKZ614
ODOKZ674
ODOKZ616
ODOKZ676
ODOKZ618
ODOKZ678
ODOKZ620

components

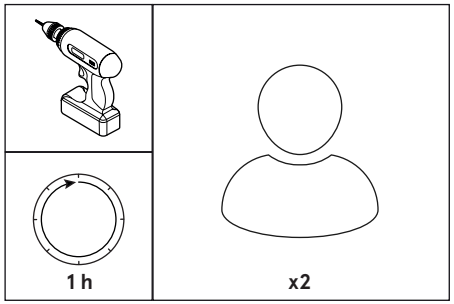

A

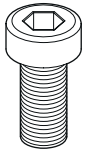

M6X12
x16

B

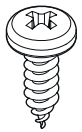

5X17
x36

C

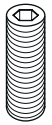

M6X16
x8

D

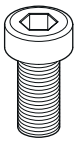

M10X16
x4

E

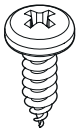

4X16
x8

F

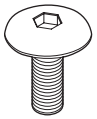

M6X15
x16

G

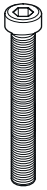

M8X60
x4

H

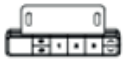

REGULAR
x2

I



REGULAR
x2

J



REGULAR
x2

K



REGULAR
x2

L

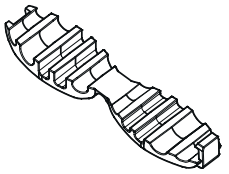

x4

K

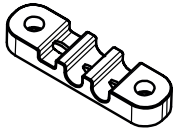

x2

L



ELEGANT
x2

M



ELEGANT
x2

N



ELEGANT
x2

O



ELEGANT
x2

P

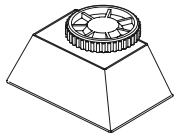

x4

R

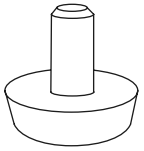

x8

S

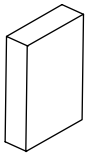

x4

A

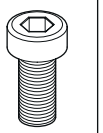

x16

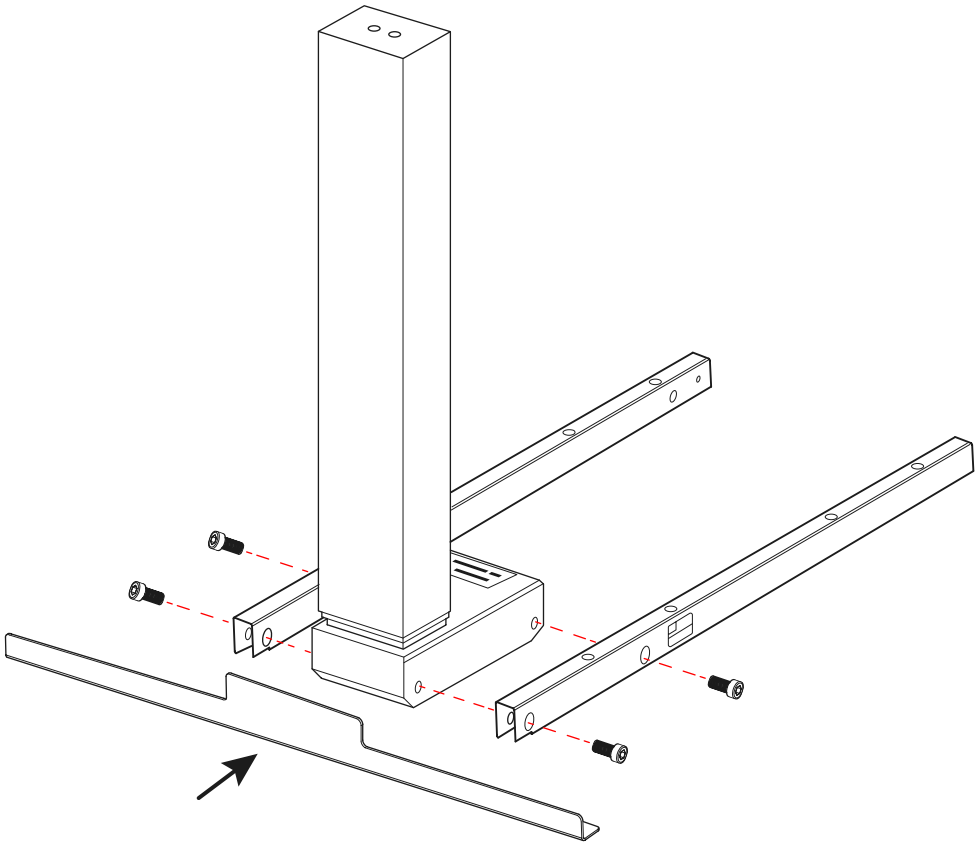

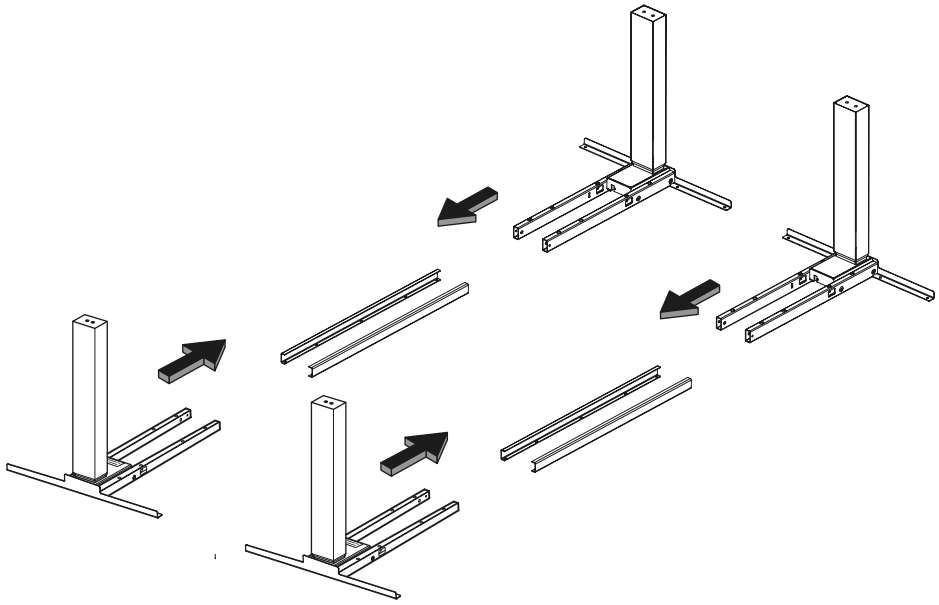

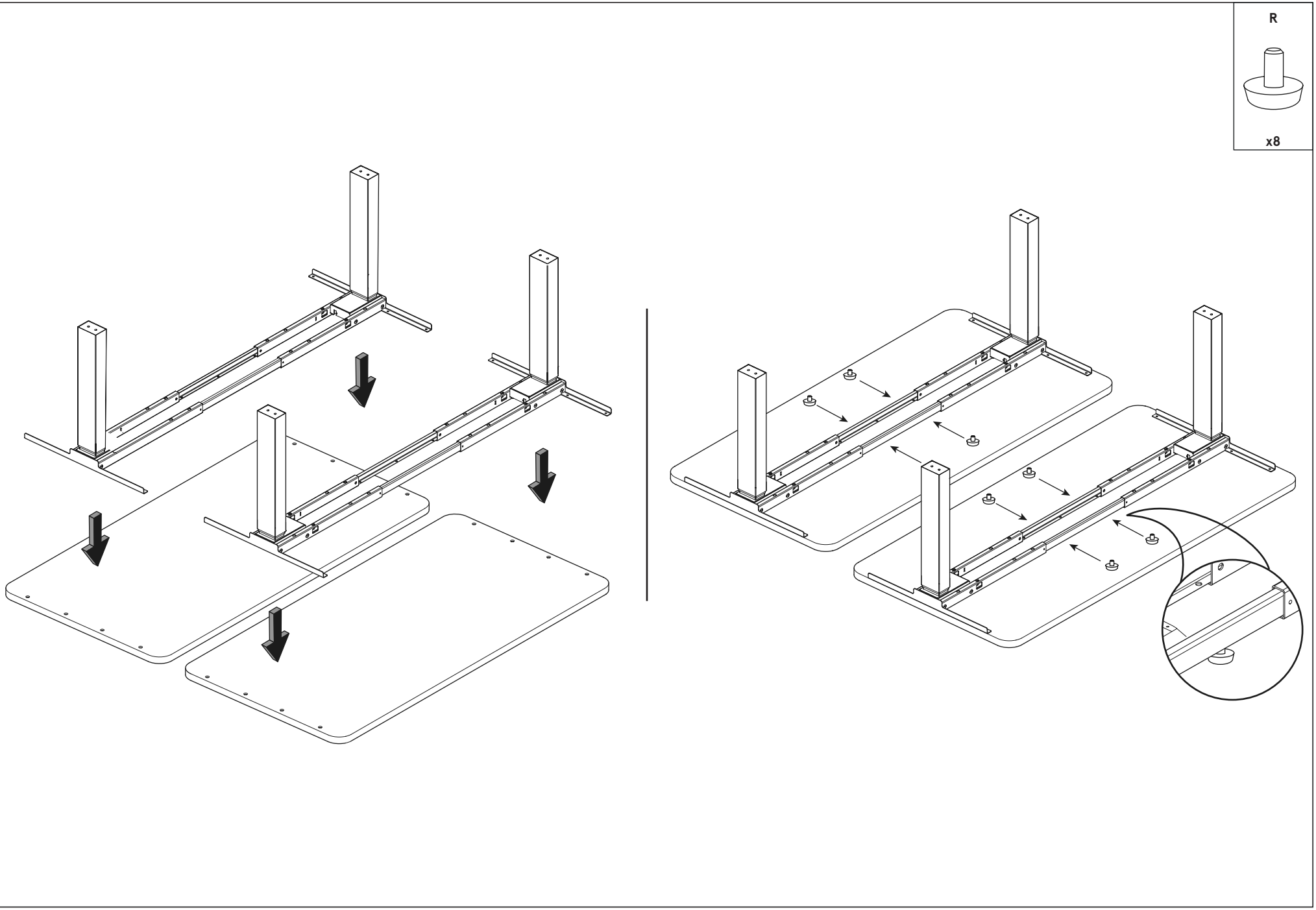
R
x8

F

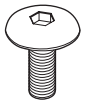

x16

B

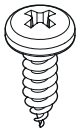

x32

C

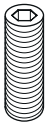

x8

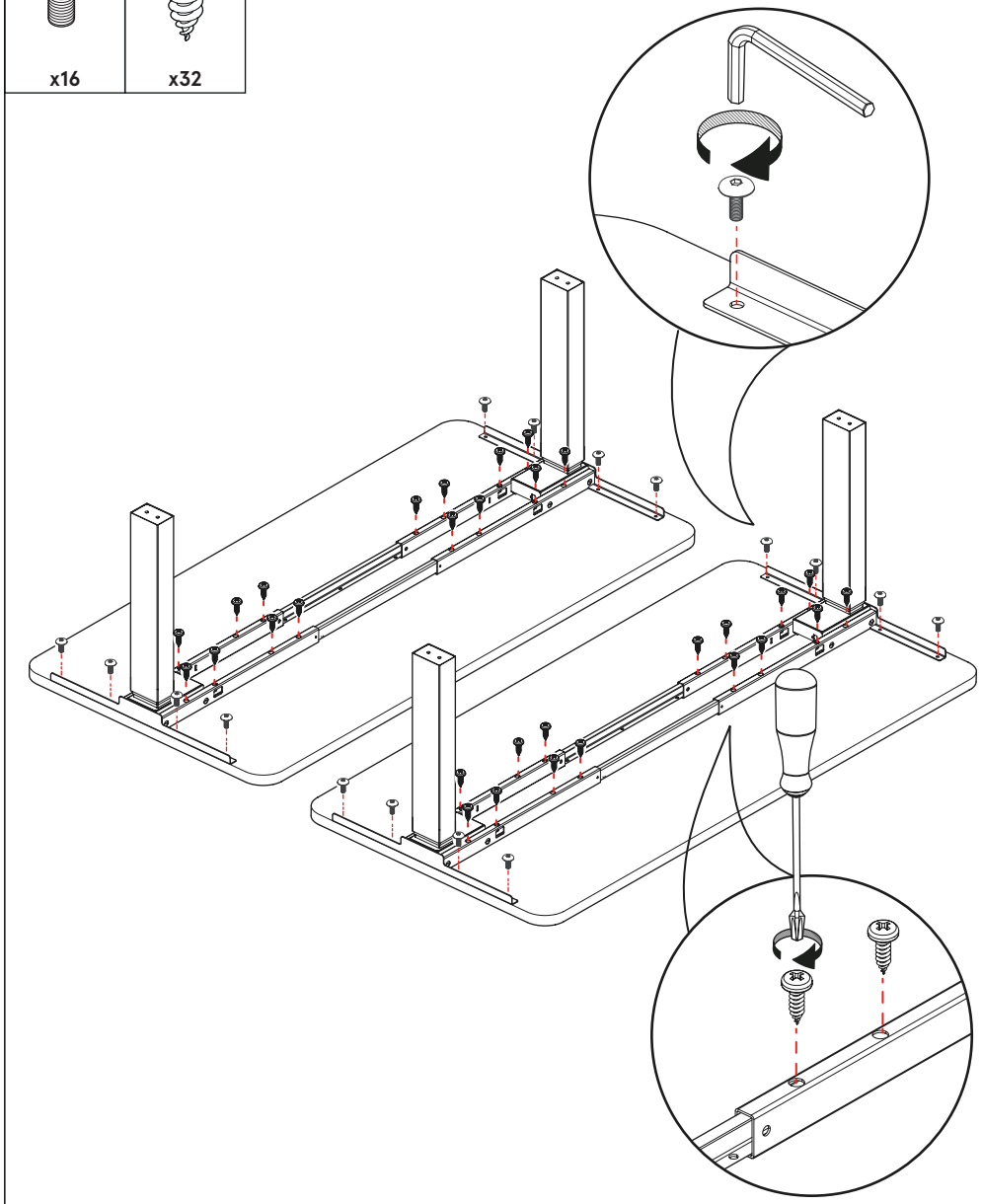

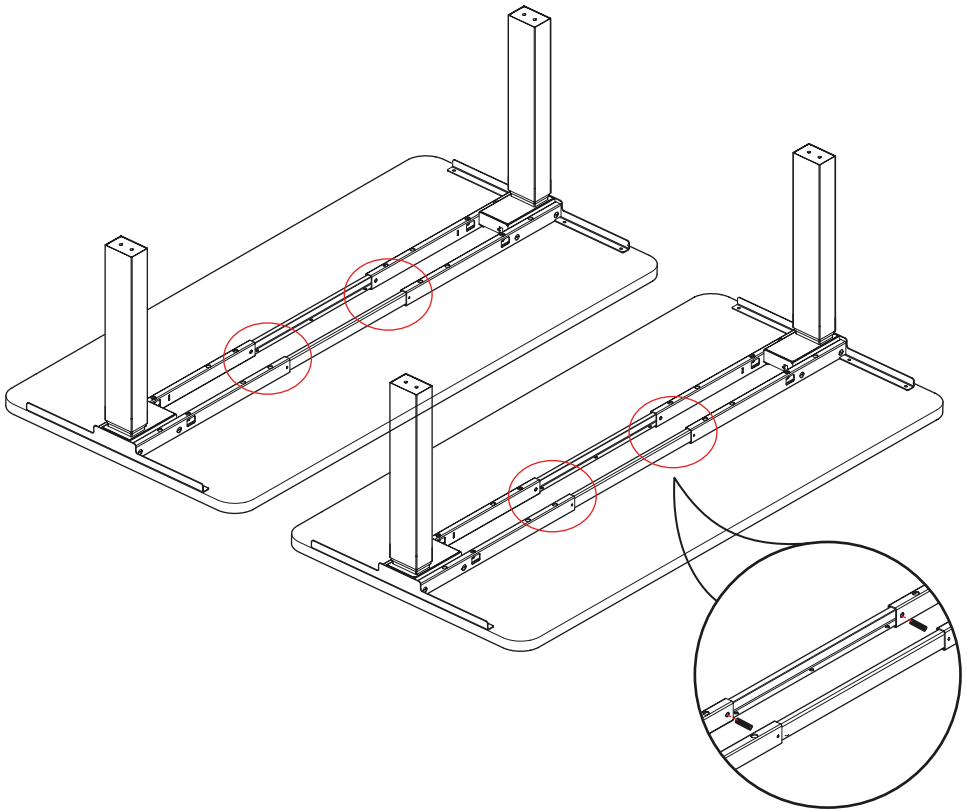

H	B
	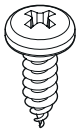
x2	x4

ELECTRICAL INSTALLATION VARIANT REGULAR

E	K
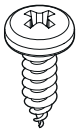	
x8	x2

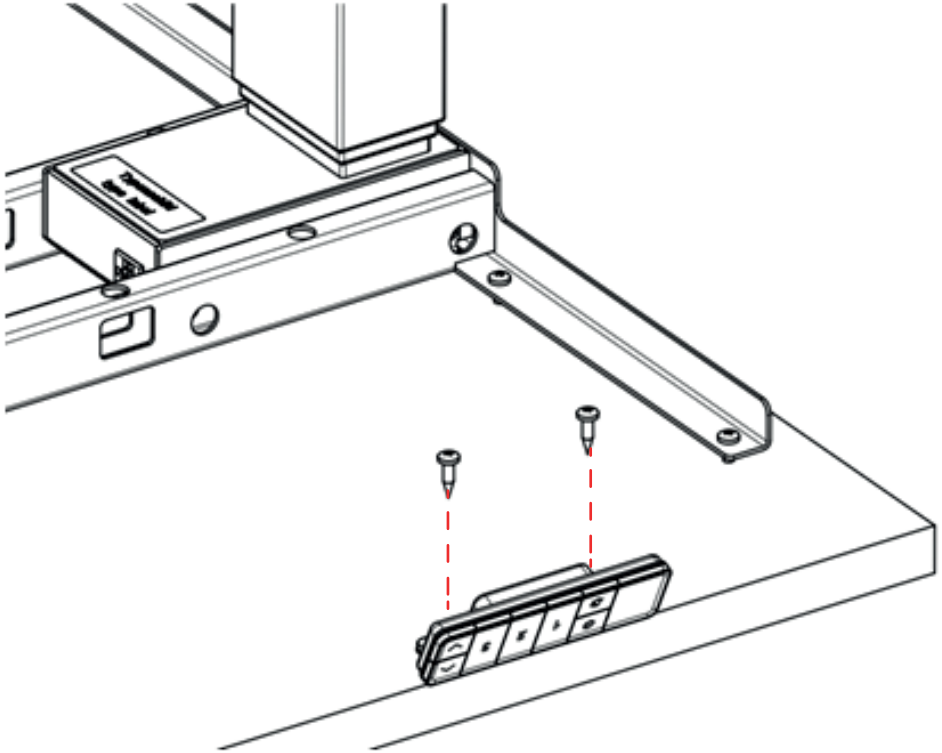

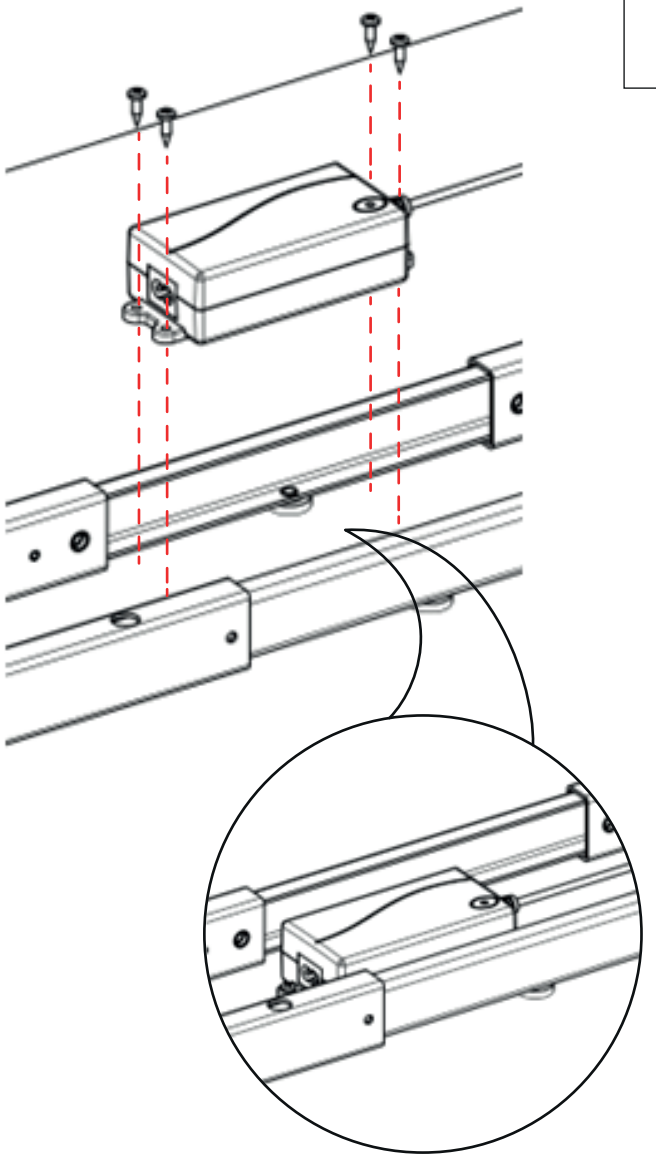

K



J



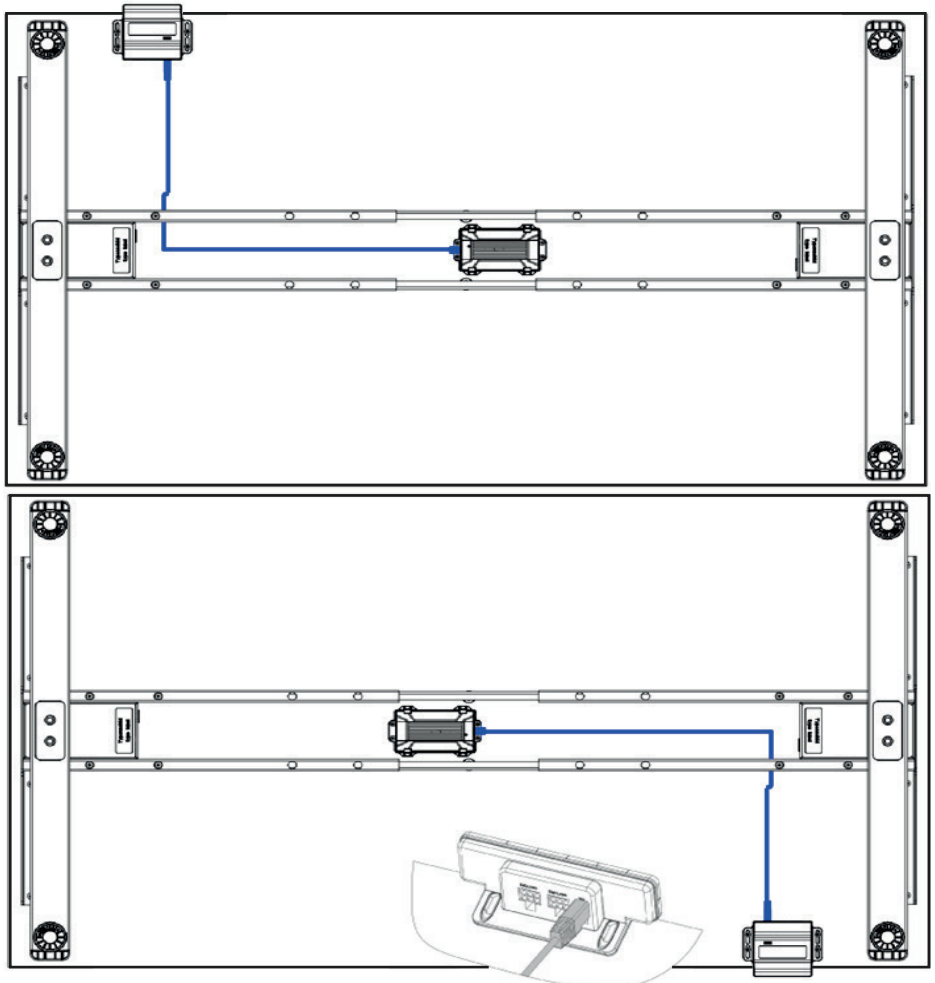

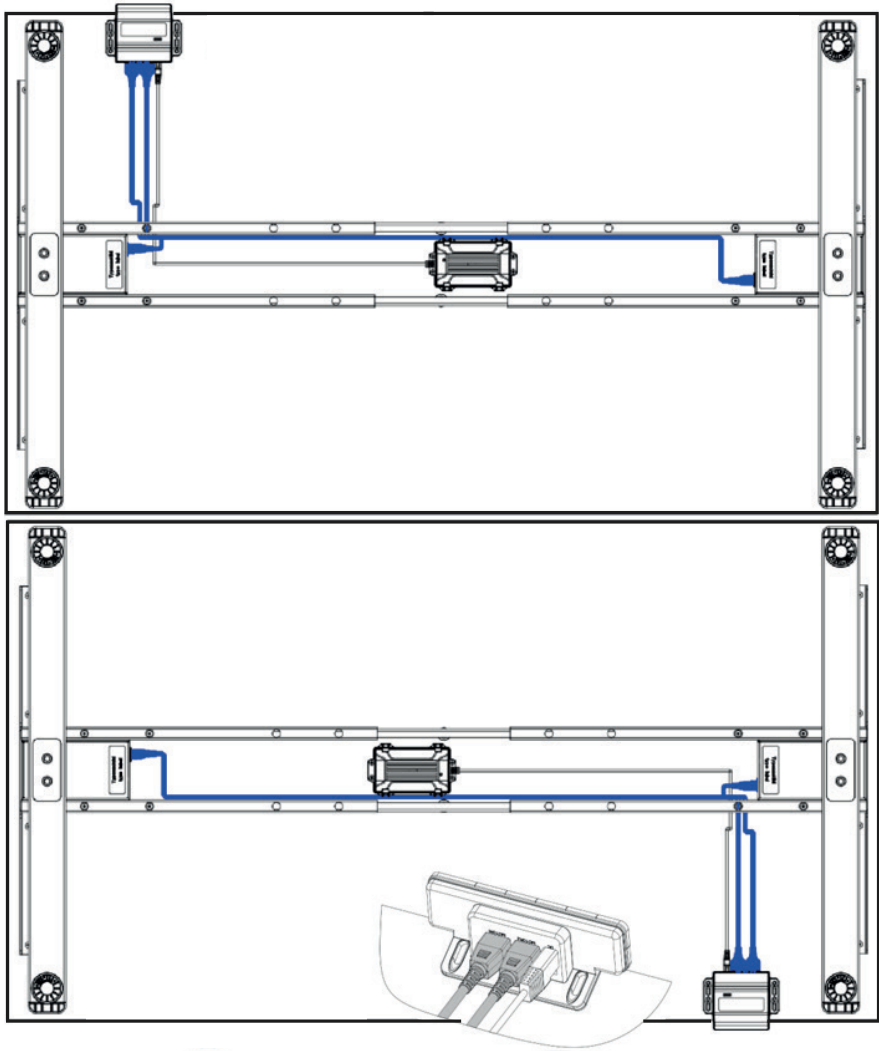

I



ELECTRICAL INSTALLATION VARIANT ELEGANT

L



x2

B

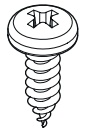

x4

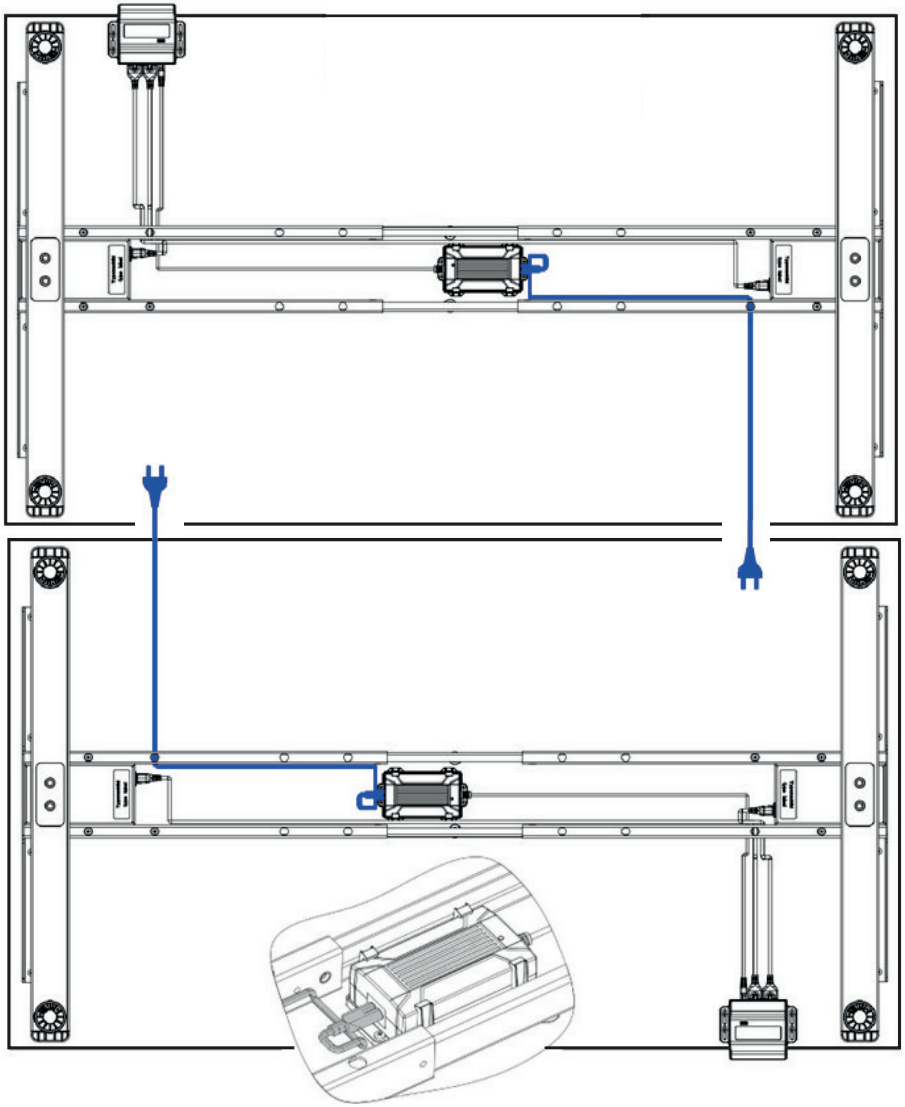

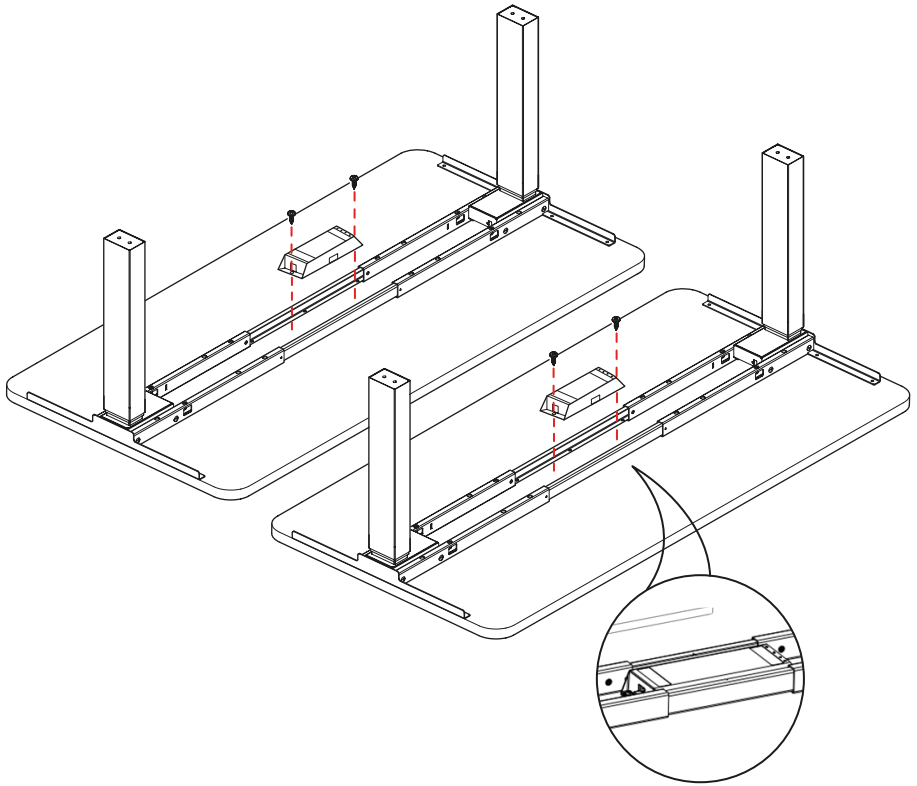

M	B
	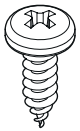
X2	x4

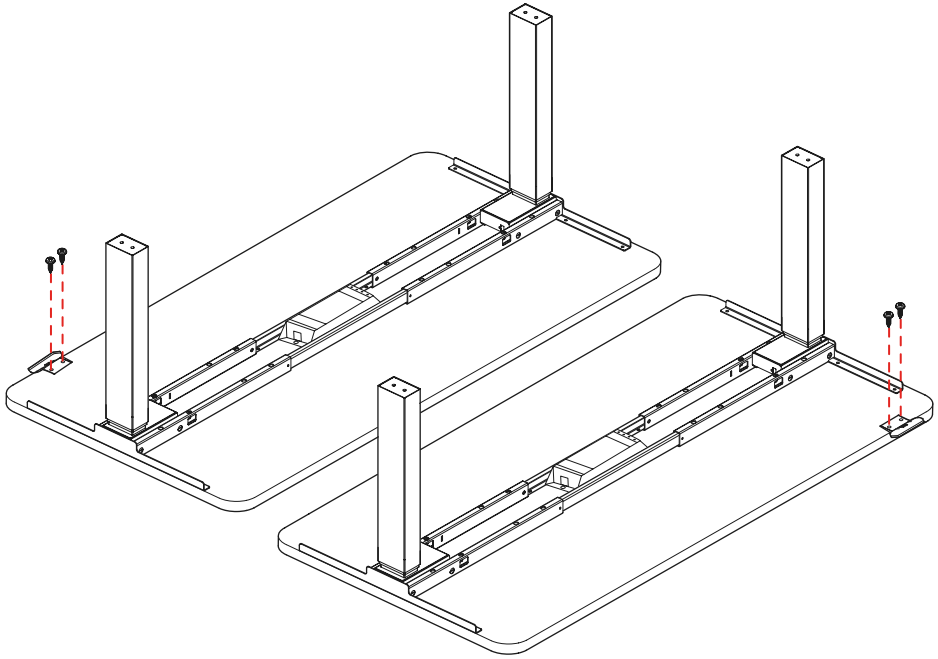

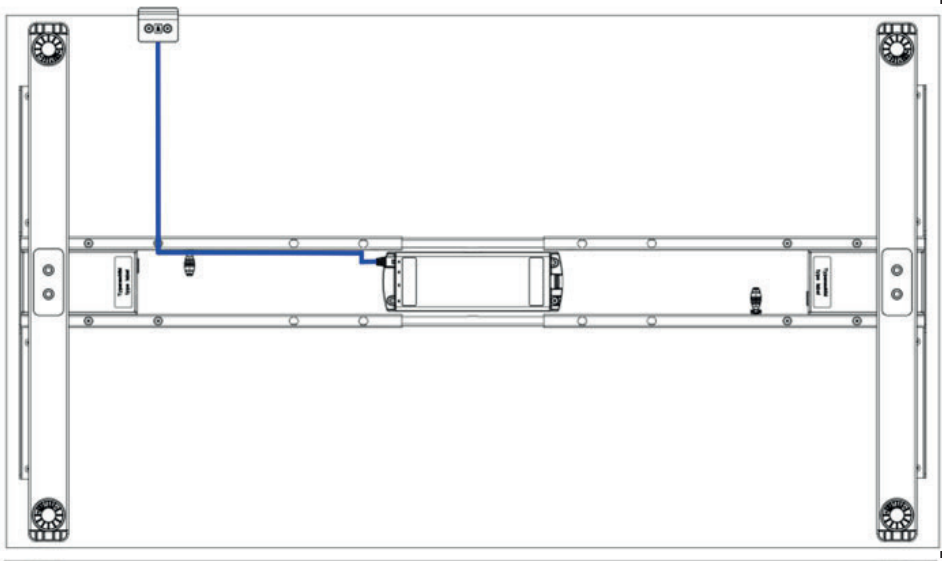

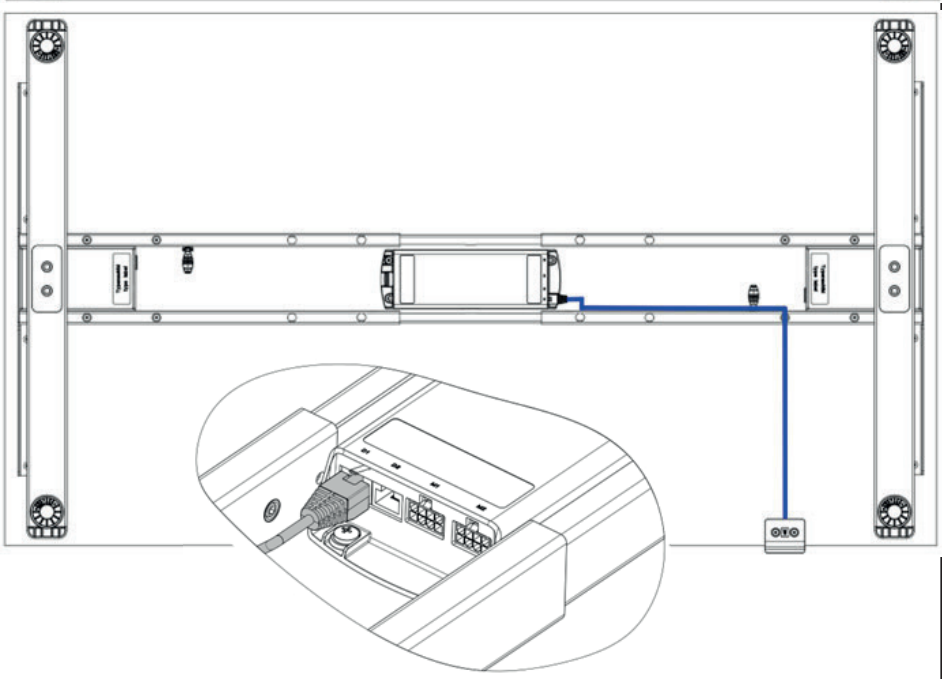

O



x1

N



x1

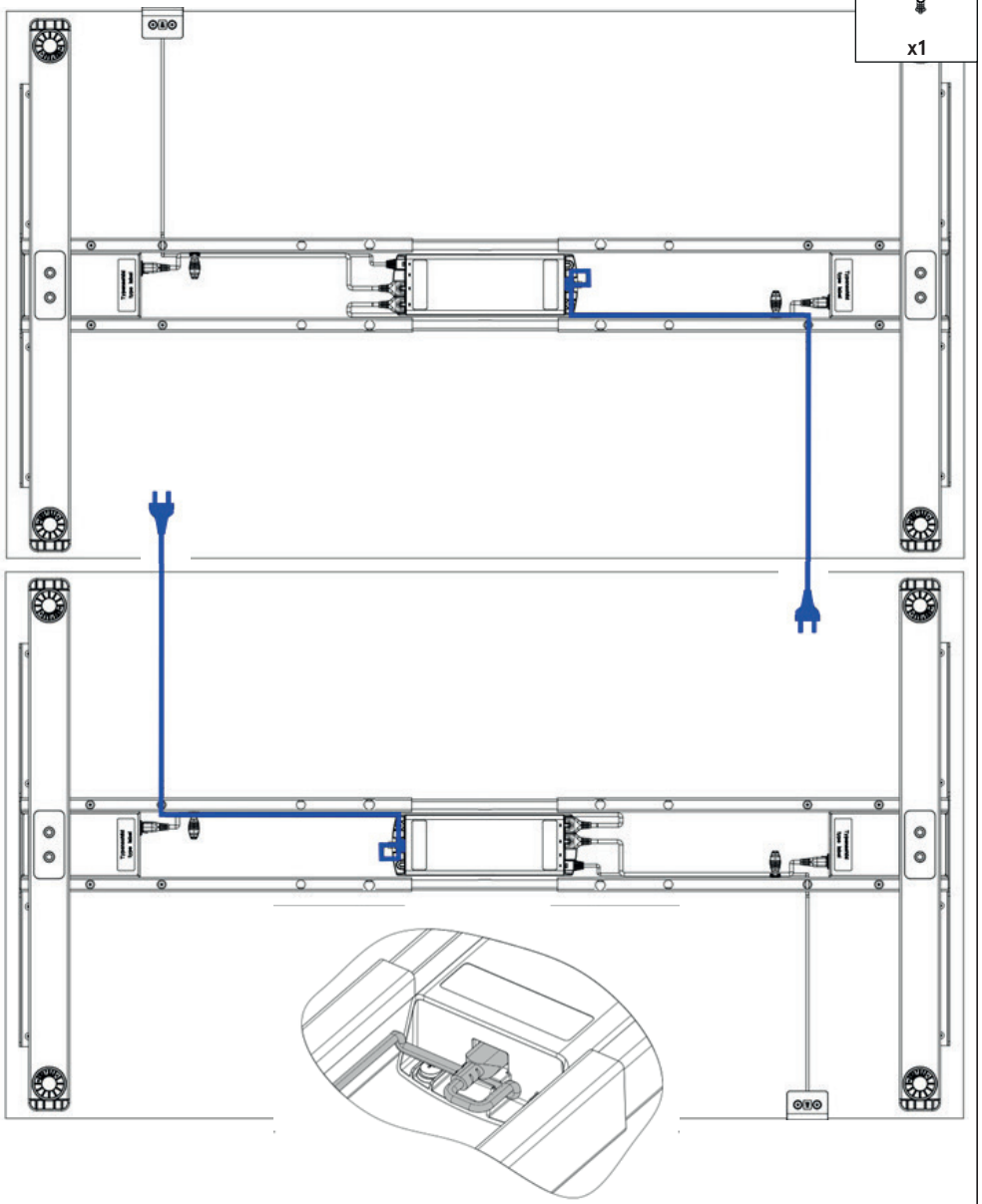

B	G
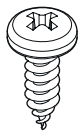	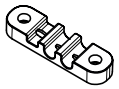
x4	x2

L

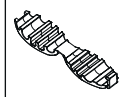

x2

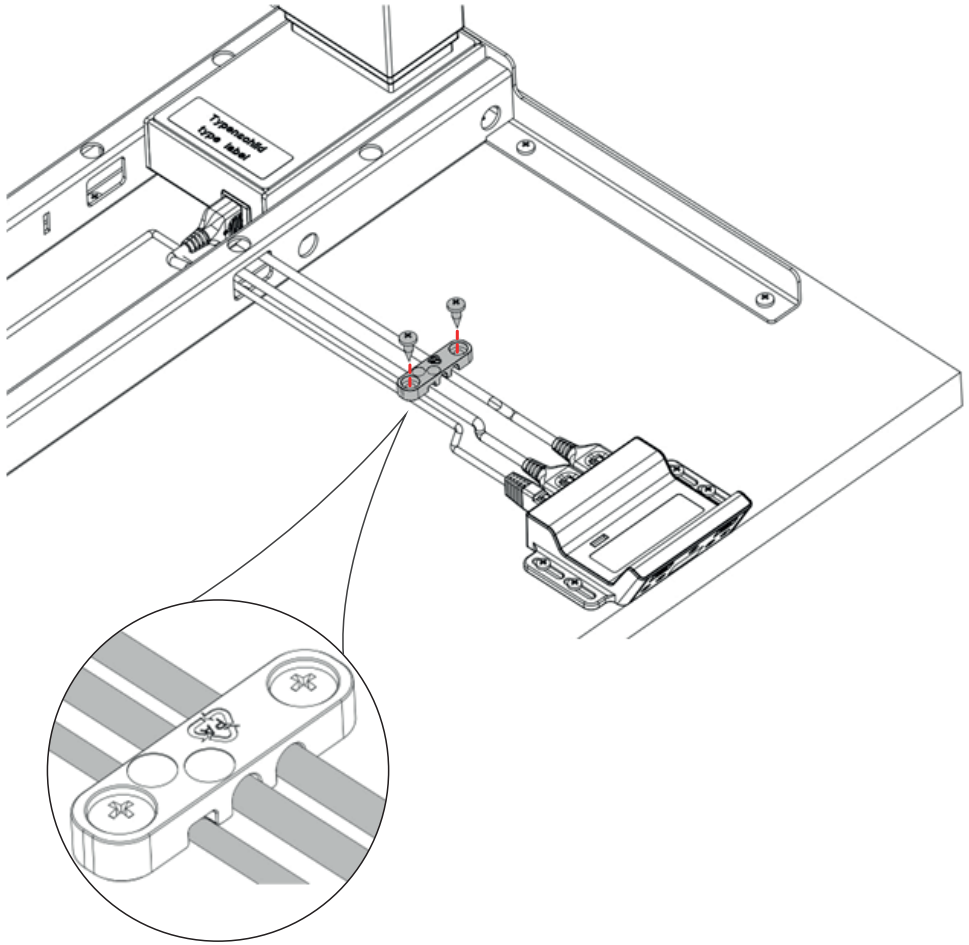

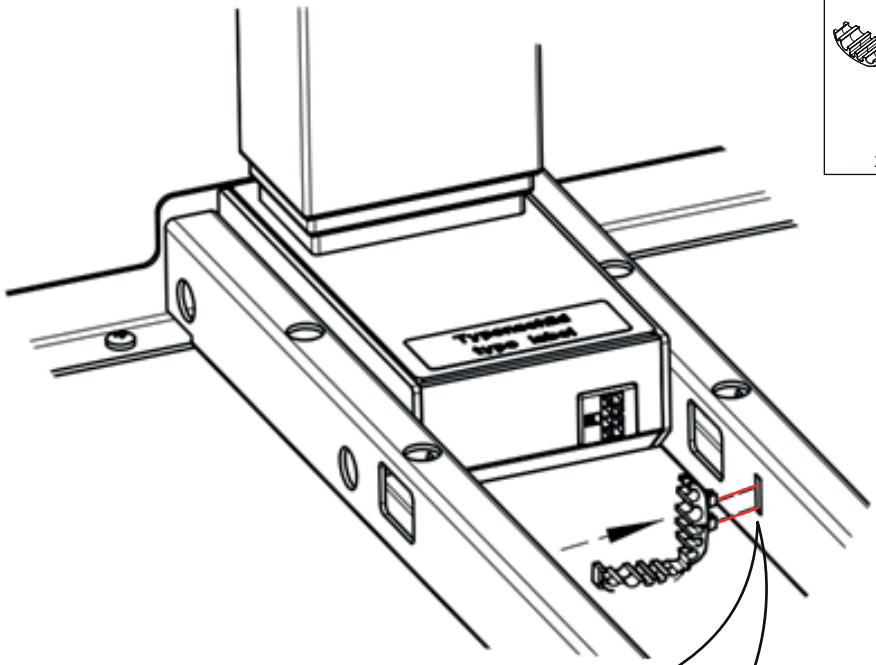

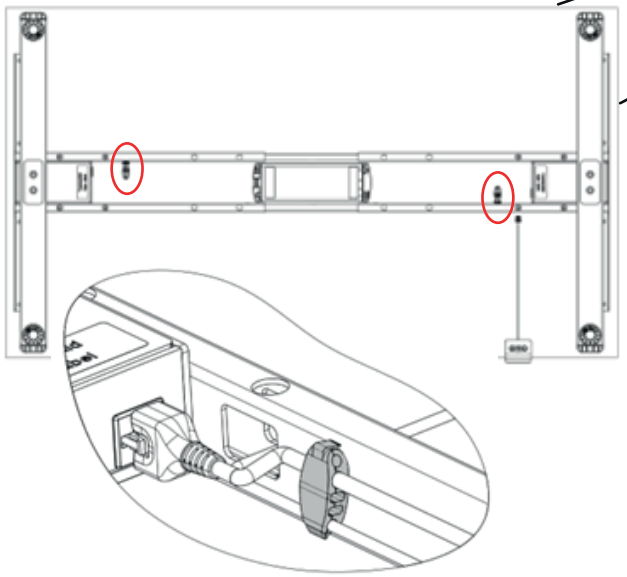

S

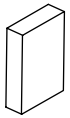

x4

P

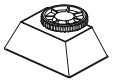

x4

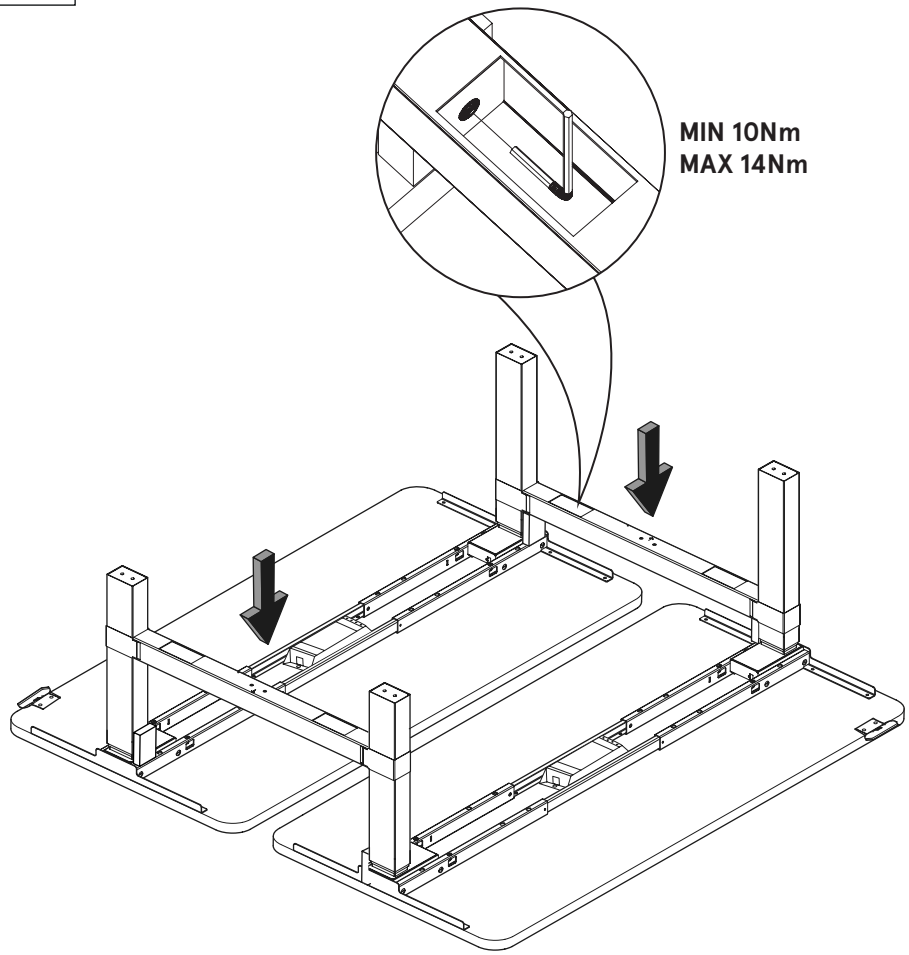

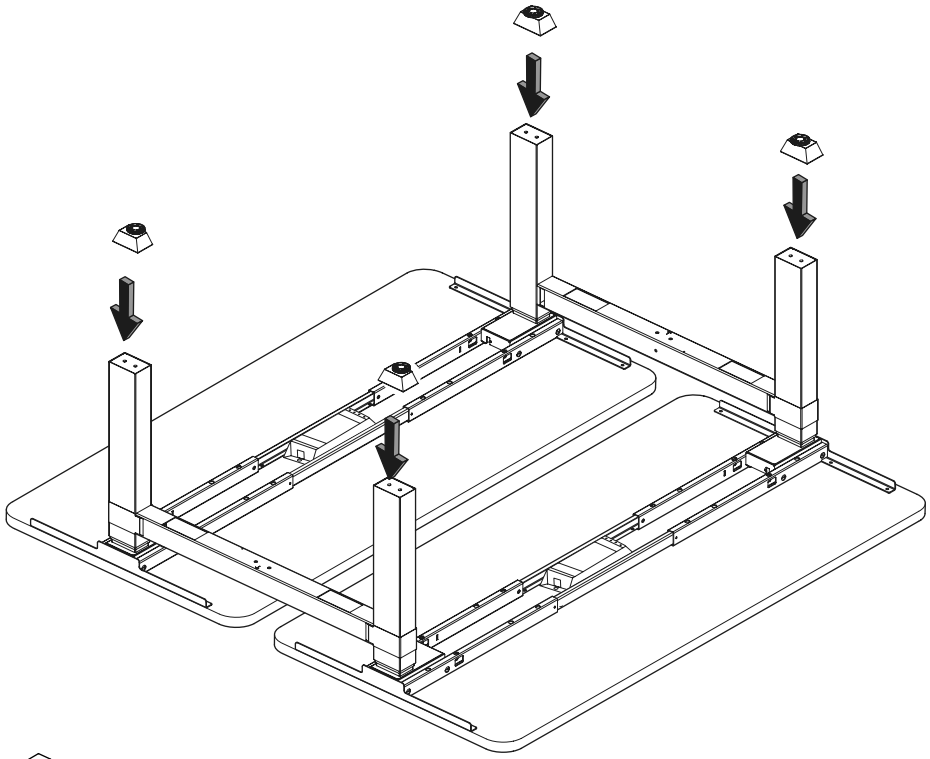

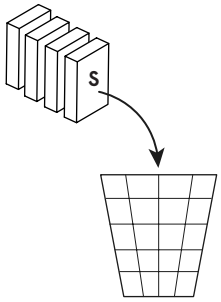

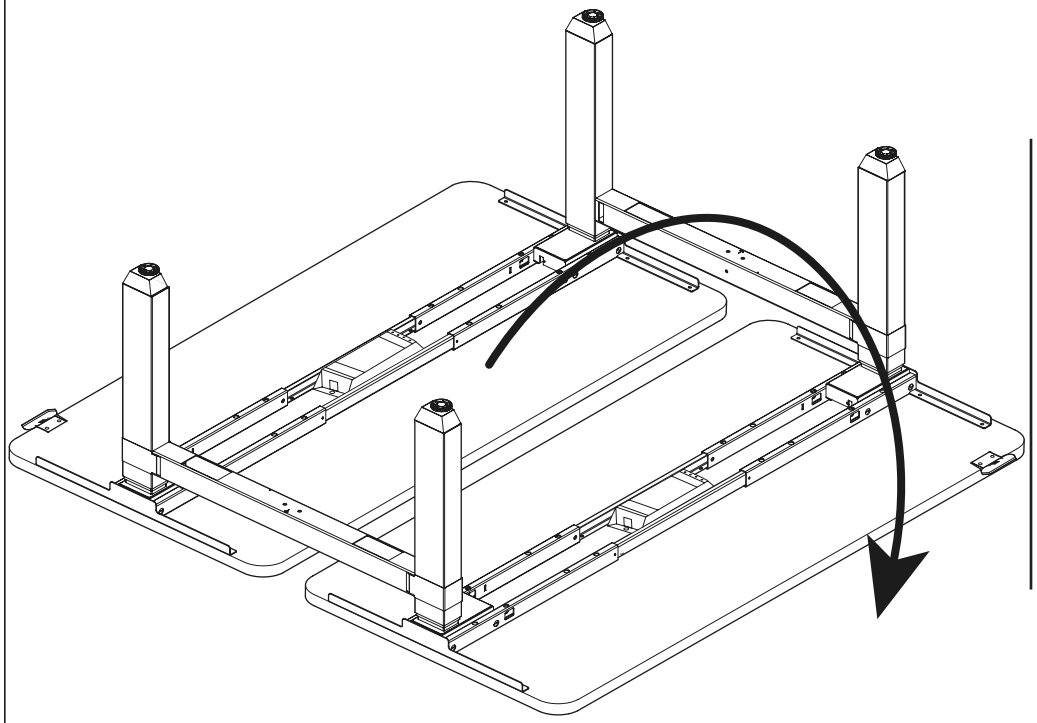

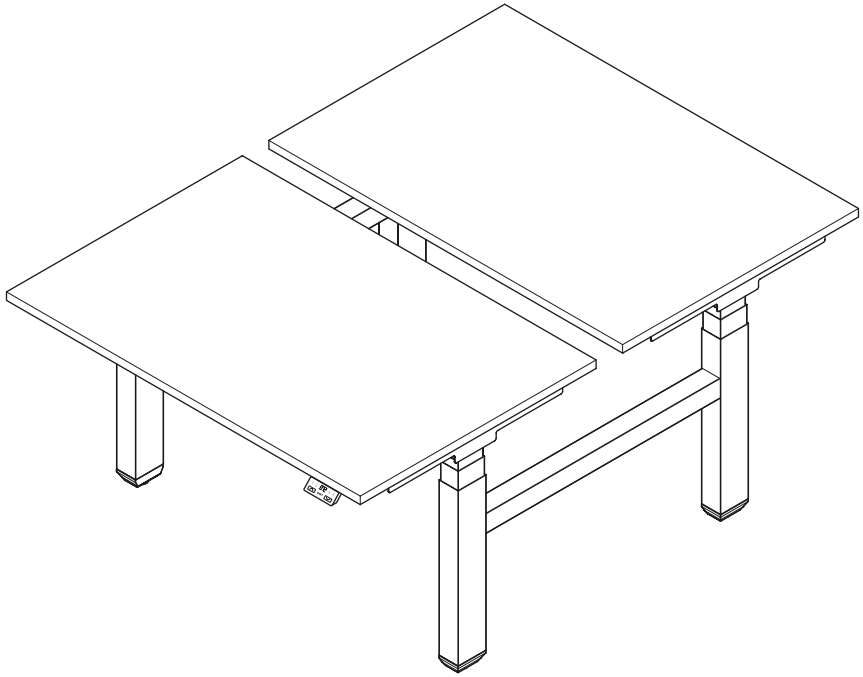

Controlling the electrical desk

OGI DRIVE

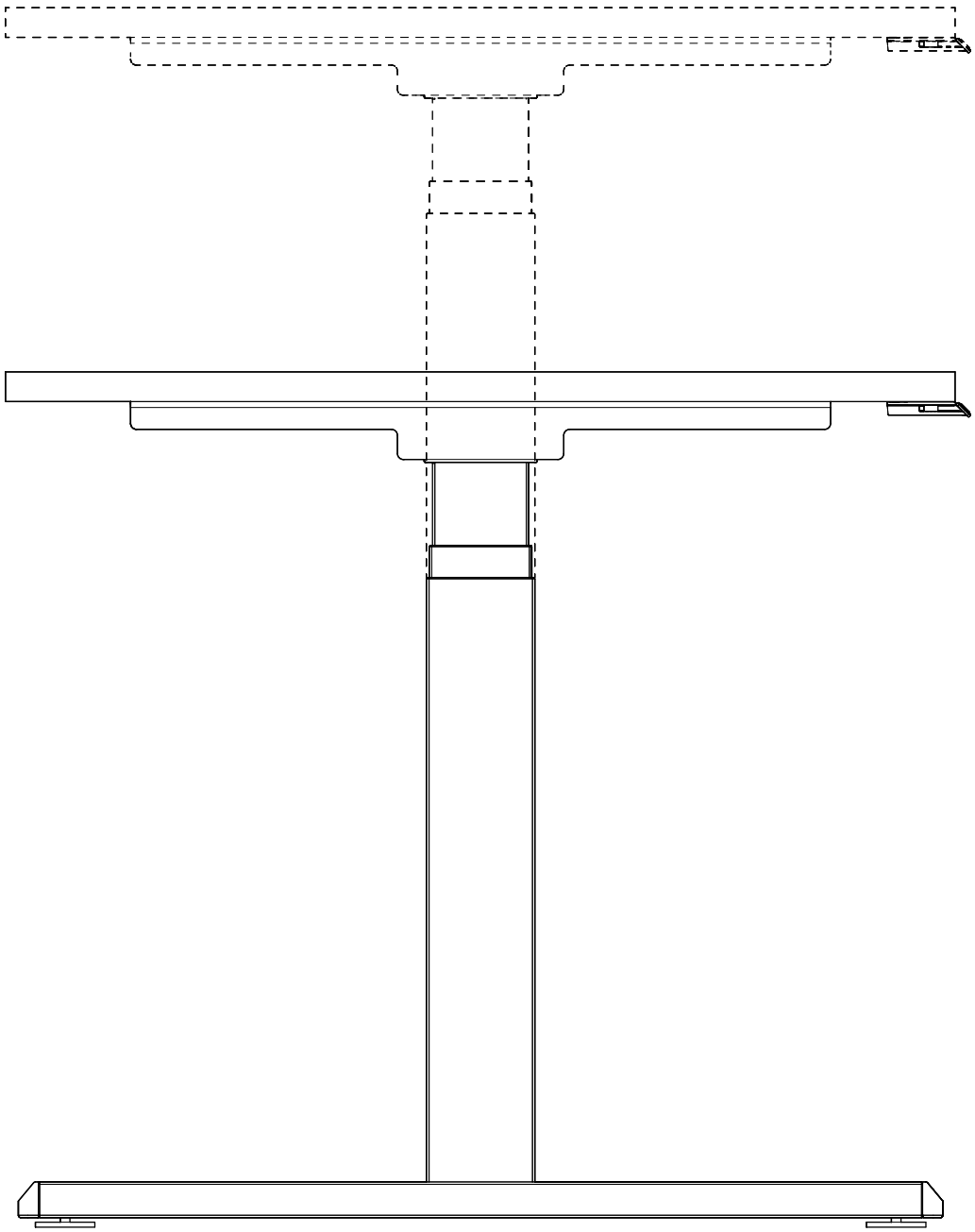

.mdd

www.mdd.eu

General Information..... 3
General safety instructions..... 3
Before initial operation..... 4
During operation..... 4
Maintenance and cleaning..... 4
Commissioning..... 5
Connections for the control variant REGULAR..... 5
Connections of the Power Supply..... 6
Initialisation / Reset..... 6
Operation variant REGULAR..... 7
Memory Positions..... 7
Locking function..... 8
Energy-Saving mode..... 8
Settings..... 8
Switch display between cm and inch..... 9
Set Collision Detection Sensitivity..... 9
Reminder Function..... 9
Troubleshooting..... 10-11
Connections for the control variant ELEGANT..... 12
Memory Positions..... 12
Open the menu..... 13
Change the unit of the altitude display (inches – cm)..... 14
Adjust the altitude display..... 14
Reset to Factory Settings..... 14
Set container and shelf stops..... 15
Delete container and shelf stops..... 16
Adjust the sensitivity of the collision protection..... 16
Adjust the speed of the table..... 17
Locking function..... 17
Maintenance..... 18
Cleaning and Care..... 18
Initialisation / Reset..... 18
Errors that are easy to rectify..... 19
Acoustic and visual codes..... 20-23
Technical Specifications..... 24
Ergonomics Guidelines..... 25

General Information

You must read these operating instructions before using this height-adjustable workstation.
These operating instructions contain essential safety information to help you operate the sit/stand desk safely and to avoid potential hazards. It is imperative that all safety instructions are strictly followed.

General safety instructions

Always read and follow the operating manual before assembling or commissioning the sit/stand desk.

Never open the power supply unit. Risk of electric shock.

The controller and power supply are not designed for continuous operation. Do not adjust the desk height continuously beyond the duty cycle specified on the type label.

Operate the power supply only with the mains voltage specified on its rating label.

This device may be used by children aged 8 and above, and by individuals with reduced physical, sensory, or mental capabilities, or lack of experience and knowledge - provided they are supervised or have been instructed in safe use and understand the associated risks.

Use only the power cable supplied with the product. Do not use the device if the cable is damaged. Operating the control unit with a damaged power cord is strictly prohibited.

Always disconnect the power plug from the mains before connecting or disconnecting drives, hand switches, or accessories.

Only use original accessories provided by by manufacturer. Using third-party components may damage the frame or electronics and is not permitted.

In the event of a malfunction (e.g. unintended movement caused by a stuck button), unplug the power cord immediately.

Protect all electrical components from moisture, splashing, and dripping water.

Risk of injury due to crushing during height adjustment. Ensure that no objects or persons are in the movement range, and never reach into the danger zone.

Modifications to the sit/stand desk or its components are strictly prohibited.

Do not operate the sit/stand desk in explosive or flammable environments.

⚠ Collision protection is disabled during initialization. Exercise extra caution during this process.

⚠ Do not assemble or operate the product if it shows visible signs of damage.

⚠ Observe ESD-safe handling procedures when unpacking electronic components.

⚠ Ever immerse cables, connectors, or electronic components in liquids. Keep them away from hot surfaces at all times.

Before initial operation

Before using the desk for the first time, ensure the following steps have been completed:

- The desk must be fully assembled according to the instructions provided in this manual.
- The columns must be properly aligned and perpendicular to the tabletop.
- Verify that the desk's operating voltage corresponds to the local mains supply. (Refer to the rating plate on the power supply; standard input voltage: 100–240 V)
- Check all connectors between the control unit, the columns and the power supply unit are securely fastened.
- Plug the mains power cable into the power supply.

During operation

Observe the following safety precautions during desk operation:

- If the drives or controller emit unusual noises or odors, immediately disconnect the power supply and inspect the system.
- Ensure that all cables and connectors are intact and show no signs of wear or damage.
- While operating the desk, ensure that no objects or body parts are in the path of moving components to avoid entrapment or injury.
- Maintain a minimum clearance of 25 mm between all moving parts of the desk base and adjacent components or furniture.

Maintenance and cleaning

Regular cleaning and inspection are essential to ensure safe and reliable operation of the desk:

- Remove dust and dirt from the desk base regularly – especially from the guide tubes.
- Inspect the desk base for visible damage such as cracks or deformities.
- Ensure that all screws are securely tightened.
- Check all plug connectors, cables, and plugs for proper function and signs of wear.

⚠ Clean the controller, columns, and desk frame only with a dry or slightly damp cloth. Risk of electric shock!

⚠ Do not use aggressive or abrasive cleaning agents, as they may damage or discolor the product. Use only cleaning agents with a pH value between 6 and 8.

⚠ Never allow liquids to enter the system components (controller, columns, cables, or base). Risk of electric shock and serious injury!

Commissioning

Prerequisites for commissioning:

- Complete assembly of the desk.
- Plug in the mains power cable only after all other electrical connections (motors and DC power) have been correctly made.
- Use only 2-pole power cables provided by by manufacturer. Using third-party cables may damage the controller.
- All connectors are specifically designed for use with original components. Connecting unauthorized parts or cables may result in electrical damage.

Connections for the control variant REGULAR

⚠ Before mounting, verify that the cable length is sufficient to reach your preferred location.

The REGULAR has the following connectors:

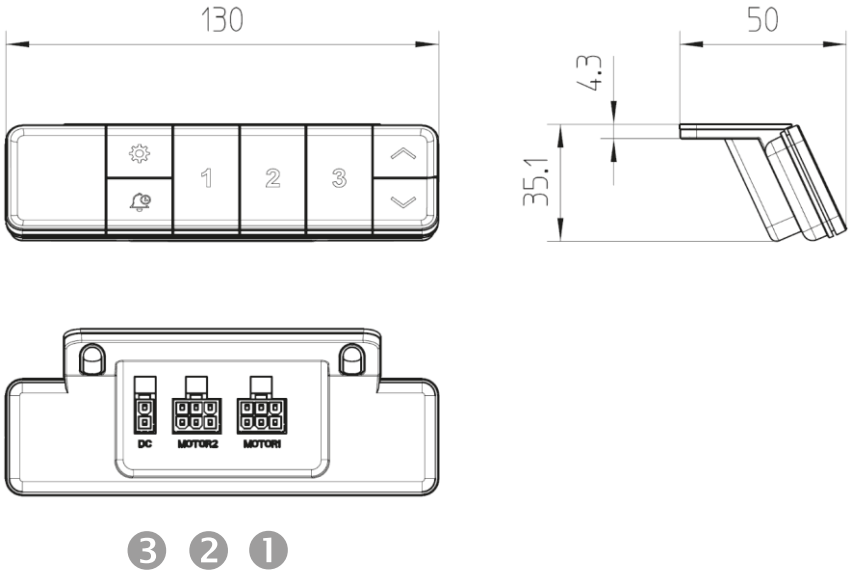

❶	MOTOR 1	Connection for Column
❷	MOTOR 2	Connection for Column
❸	DC	DC INPUT for power supply

Connections of the Power Supply

Before connecting the power cable:
- Verify that the mains voltage matches the rating plate on the controller.
- Double-check that all components are properly connected.

Connect the DC output of the power supply STAND.POWER 29V to the corresponding socket on the REGULAR. Ensure that the connector is securely locked.

Use only the original 2-pole power cord supplied with the unit.

Before plugging into the outlet:
- Ensure that all cables are routed correctly and secured to the tabletop or frame.
- Use any included cable clips or fasteners.

Make sure that no cables are pinched, pulled, or stretched during desk movement. Damaged cables must be replaced.
The system is ready for operation as soon as the mains cable is connected.

A reset procedure (initialization) is required when the desk is powered on for the first time.

Initialisation / Reset

Before Performing a Reset:
- Ensure that the desk is in its lowest possible position.
- If the display height is higher than the desk's actual height (e.g. after swapping hand switches), carefully lower the desk.

Performing a Reset:

1. Press and hold the "∨" button for 5 seconds. The display shows "rES", and the reset process begins automatically.
2. The columns will slowly move downward to the lowest mechanical position.
3. Once the lowest point is reached, the system will rebound approx. 5 mm and a beep will confirm successful reset.
4. You do need to continue holding the button until the beep is heard.

Never operate the desk if it is not correctly initialized. An incorrect height value may cause the lifting columns to exceed their limits, leading to mechanical damage.

The controller's upper limit stop is preconfigured. Only use control units that are specifically supplied for your desk model.

Optional collision protection is deactivated during the reset process. Be especially cautious and ensure no body parts or objects are within the movement range.

Operation variant REGULAR

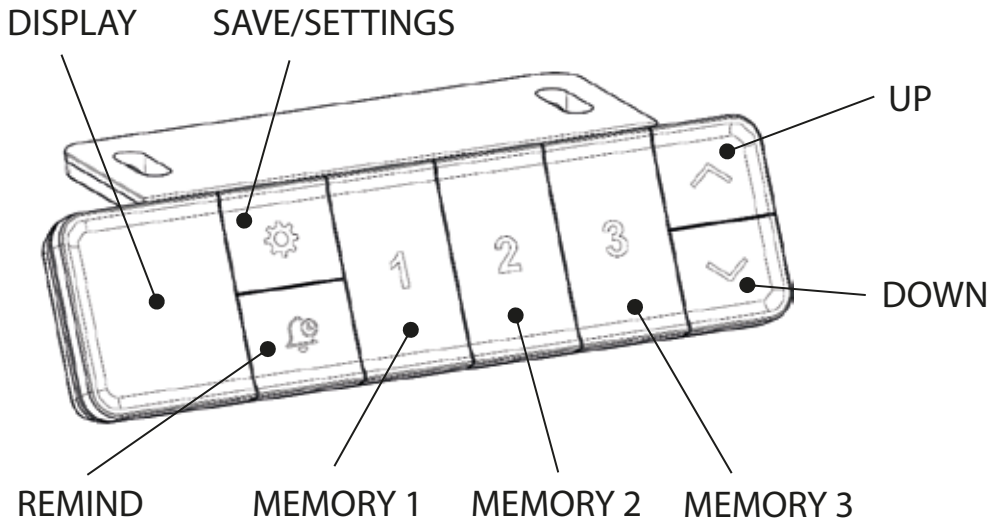

Up Operation

To run the desk up, press and hold the " ∧ " (Up) button. Release the button to stop the movement. The display will show the actual height while the desk is moving and continue to show the height for 30 seconds when the desk stops. The desk will stop automatically once it reaches the upper limit.

Down Operation

To run the desk down, press and hold the " ∨ "(Down) button. Release the button to stop the movement. The display will show the actual height while the desk is moving and continue to show the height for 30 seconds when the desk stops. The desk will stop automatically once it reaches the lower limit.

Memory Positions

The hand switch supports three programmable memory positions. These can be saved and recalled using the buttons "Memory 1", "Memory 2", and "Memory 3".

Storing a memory position

1. Drive the desk to the desired height.
2. Press the "Save/Settings" button. The current height will be displayed and flash for 3 seconds. (To cancel, press "Save/Settings" again.)
3. While the Display is flashing, press one of the memory buttons (Memory 1–3) to store the desired height.
4. Upon successful saving, the display will show H1 / H2 / H3 briefly, then return to normal mode.

Drive to a stored memory position

1. Press one of the memory buttons (Memory 1–3).
2. The desired height will appear briefly in the display.
3. The desk will move up or down to the saved position.
4. The display shows the actual height during movement.
5. Press any button to interrupt the movement.

Locking function

Lock the System:
· Press and hold " ∧" and " ∨" simultaneously for 3 seconds.
· The display will show "LoC" – indicating the system is locked. No movement is possible.

Unlock the System:
· Press and hold " ∧" and " ∨" simultaneously for 3 seconds.
· The display will return to normal operation.

Energy-Saving mode

If no button is pressed for 30 seconds, the hand switch enters Energy-Saving mode:
- The display turns off.
- The controller changes to low power consumption mode.
- Press any button to leave the Energy-Saving mode.

Settings

The REGULAR allows adjustments to:
- "Un" Display unit cm or inch
- "CF" Collision detection sensitivity (Collision detection)

To enter the settings menu:
1. Press and hold the "Save / Settings" button for 3 seconds. The display shows "S -" and flashes.
2. Press the "Save/Settings" button again shortly to enter the main menu.
3. Use the " ∧" and " ∨" buttons to select between settings options "Un" or "CF".
4. Press "Save / Settings" button to select or save changes.

If no button is pressed within 20 seconds, the menu will be exited.

Switch display between cm and inch

Options:
- SI = Metric (cm)
- In = Imperial (inch)

1. Press and hold the "Save/Settings" button for 3 seconds. The displays shows "S -" and flashes.
2. Press the "Save/Settings" button again shortly to enter the main menu.
3. Use the "∧" or "∨" button to select the option "Un" and press the "Save/Settings" button to enter the "Un" menu.
4. Use the " ∧ " and " ∨" button to select between the options "SI" or "In"
5. Press the "Save/Settings" button to save the option and exit the settings interface.

Set Collision Detection Sensitivity

Options:
- **OFF** = Disabled
- **L** = Low sensitivity
- **N** = Normal sensitivity
- **H** = High sensitivity

1. Press and hold the "Save/Settings" button for 3 seconds. The displays shows "S -" and flashes.
2. Press the "Save/Settings" button again shortly to enter the main menu.
3. Use the "∧" or "∨" button to select the option "CF" and press the "Save/Settings" button to enter the "Un" menu
4. Use the " ∧" and " ∨" button to select between the options "OFF", "L", "N" or "H".
5. Press the "Save/Settings" button to save the option and exit the settings interface.

Reminder Function

Activate the Reminder Function

1. Press the "Remind" button. The display shows x.xh (0.0 h – 4.0 h).
2. Use the "∧" or "∨" button to adjust the timer in 0.5 hour increments.
3. There is no button to press; the setting is automatically saved after 2 seconds.
4. After successful adjustment, a decimal point flashes on the display when the control changes to energy-saving mode.

Reminding Function is activated:
- A flashing decimal point indicates the function is active.

Preset Time of the Reminder Function has been reached:
- The controller emits a beep, and the display lights up.
- Adjust the desk height to the opposite position up or down to restart the reminder function.

Activate the Reminder Function

1. Press the "Remind" button. The display shows x.xh (0.0 h – 4.0 h).
2. Use the "∧" or "∨" button to adjust the timer in 0.5 hour increments to 0.0.
3. There is no button to press; the setting is automatically saved after 2 seconds.
4. After successful adjustment, a decimal point will not flash on the display.

Troubleshooting

Fault	Cause	Repair
Desk does not move	No power supply	Check and plug in the mains cable. Verify all connections.
	Loose or disconnected cables	Verify all connections. Check and securely reconnect the cables.
	Maximum lifting capacity exceeded	Reduce the load on the desk.
	Maximum duty cycle exceeded	Wait 18 minutes for the system to automatically reactivate.
	Malfunction of the Column	Contact customer service.
	Malfunction of the Control Unit	Contact customer service.
	Malfunction of the power supply	Contact customer service.
Desk only moves slowly down	Reset required	Perform **reset operation** as described in Section 5.3.
Desk only moves slowly up	Overloaded	Reduce the load on the desk.
Desk only moves briefly on one side and then remains stationary	Column not connected or loose	Check and reconnect motor cables. Check motor cables.
	Column defective	Contact customer service.

If the problem cannot be resolved with the steps above, disconnect the power plug, wait several minutes, then attempt a reset.

If the issue persists, contact customer service and do not use the desk further.

Troubleshooting

Displayed Code	Description	Remedial action
E31	Mains voltage too low (below 20 V)	Replace the power supply unit.
E32	Mains voltage too high (above 36 V)	Replace the power supply unit.
E02	Encounters resistance and rebounds in reverse direction for 4 cm.	Remove obstacles. Correct the alignment of the table columns. Adjust the sensitivity of the collision detection.
HOT	System overheated: operated for 5 minutes with intervals under 10 seconds	Let the system cool down for 15 minutes before using again.
E10	Motor cable not connected	Check the motor wiring and reconnect if necessary.
E20	Overload, blockage, or top impact	Reduce the load.
E60	Synchronization error	Perform a full reset (see Section 5.3).

If a power outage occurs during height adjustment or if a cable is disconnected, a manual reset may be required.

If the error persists after reset, unplug the system, wait a few minutes, and try again. Should the issue remain unresolved, contact authorized customer service and refrain from further use.

Connections for the control variant ELEGANT

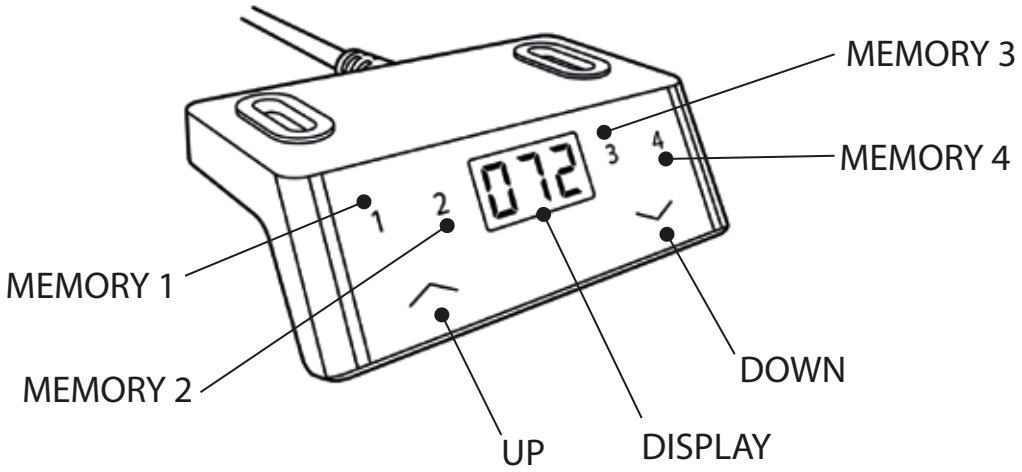

Up Operation

Press the "∧" button to raise the table top. Hold the button down until the table top reaches the desired height. The table will stop automatically when it reaches the lower end position (container stop, safety stop or minimum position).

Down Operation

Press the "∨" button to lower the table top. Hold the button down until the table top reaches the desired height. When the table reaches its upper end position or a preset shelf stop, the movement will stop.

Memory Positions

The ELEGANT controller allows the user to save up to four height settings. Thisfunction can only be operated using the handy remote control. The settings are stored in the controller and are retained even if the remote control is replaced.

Storing a memory position

1. Use the arrow buttons ("∧" and "∨") to adjust the table to the desired height.
2. Press the 'Logo' button below the display.
3. Will appear P_ on the display.
4. Press the position button (buttons 1–4) under which you wish to save the position.
5. The selected position will appear on the display (e.g. P1)

The current altitude is now ready to be called up using this position button. After approx. 2 s, the display switches automatically and shows the current altitude again. In this way, each position button can be assigned an altitude. Saved positions cannot be deleted, but you can save a new altitude to the position buttons at any time.

Note: No positions can be saved below an existing container stop, and any positions saved below it prior to setting a container stop can no longer be moved to; the table will then stop at the container stop. The same applies to the shelf stop and positions above it.

Retrieve positions

Press the button for the desired position. Keep the button pressed until the table has reached the desired height and the movement has stopped. The button must be held down until the movement has finished. If the button is released prematurely, the table will stop.

Note: Saved positions located below a newly created container stop and above a newly created shelf stop are ignored. In this case, the table moves only as far as the container or shelf stop.

Open the menu

The comfort hand-held controller offers various setting options that can be adjusted by the operator themselves. The functions available depend on the configuration, so these setting options may not be available on every control unit. Press and hold the 'Logo' button for at least 6 seconds until the display F changes to . Once the display shows after a few seconds, F1 you can use the arrow buttons (" ∧ " and " ∨ ") to navigate through the menu.

F1	Change the unit of the altitude display (inches – cm)
F2	Adjusting the Altitude Display
F3	Resetting to Factory Settings
F4	Setting Container and Shelf Limits
F5	Deleting Container and Shelf Limits
F6	Increasing the Sensitivity of the Internal Collision Protection (Upward)
F7	Adjusting the Sensitivity of the Internal Downward Collision Protection
F8	Adjusting the Sensitivity of the Sensor Upward
F9	Adjusting the Sensitivity of the Sensor Downward
F10	Adjusting the Table Speed
F11	Lock Function / Protection Against Unauthorized Use

If no selection is made and no further actions are taken, the display automatically returns to the altitude display after about 10 seconds.

Change the unit of the altitude display (inches – cm)



The display can show the height of the tabletop in centimeters (cm) or inches (in). The unit can be changed via the menu. The height is displayed in whole centimeters or in tenths of an inch with one decimal place.

To change the units, proceed as follows:

1. Follow the instructions to access the hand control menu.
2. If necessary, use the arrow keys (" ∧ " and " ∨ ") to navigate to menu item 1. It must be F1 displayed on the screen.
3. Confirm your selection by pressing the "Logo" button again.
4. The display shows the currently set unit (1 for inches or C for cm).
5. Now select your desired unit by pressing the ∧ or ∨ buttons.
6. Confirm your selection by pressing the "Logo" button again.
7. The handheld controller automatically returns to the elevation display.

Adjust the altitude display



In some cases, the Comfort Hand Control may not display the actual height of your table's tabletop. This may be due, for example, to height adjustments made using leveling pads under the table legs or the use of tabletops of varying thicknesses.
In such cases, you can adjust the height in the Comfort Hand Control menu.

To do this, follow these steps:

1. Measure the current, correct table height. Make a note of the actual table height. If you measure the table height at its lowest position, you can set this value directly later; otherwise, determine the difference between the displayed height and the actual height.
2. Follow the instructions to access the hand control menu.
3. If necessary, use the arrow keys (" ∧ "and " ∨ ") to navigate to menu item 2. It must be F2 shown on the display.
4. Confirm your selection by pressing the "Logo" button again. The height of the minimum position appears on the display.
5. Use the arrow keys (" ∧ "and " ∨ ") to adjust the displayed height up or down to match the actual height at the minimum position; use the value determined in step 1 or the difference between the displayed and actual heights determined there for the adjustment.
6. Confirm the entry by pressing the "Logo" button again.
7. The hand-held controller automatically returns to the height display.

Reset to Factory Settings



In certain cases, it is necessary to reset the controller to its factory settings. For example, the table configuration has been significantly changed, particularly if the number of connected drives to a single controller or to cascaded controllers has been altered. Also, if previously cascaded controllers are to be disconnected, they must be reset to factory settings. In some cases, resetting the controller can also be a solution that simplifies troubleshooting.

Note: If this function is executed, all personal settings will be deleted. All settings will be reset to the values in the parameter set stored as the factory default in the controller; this also applies to the memory locations. The factory default usually corresponds to the controller's label, but exceptions are possible.

After restoring the factory settings, the control system behaves as if it were being commissioned for the first time. All connected components are detected again, and an initialization run must be performed.

Note: The "Restore Factory Settings" function can generally be executed at any time, regardless of the table's current position. However, it makes sense (if currently possible) to move the table to the lowest possible position beforehand. This is because the initialization movement required afterward will then be shorter and, consequently, faster. A higher position may simply increase the time required for the initialization movement.

With a convenient handheld controller

To reset the control unit to factory settings, follow these steps:

1. Follow the instructions to access the hand-held controller menu.
2. If necessary, use the arrow keys (" ^ "and " v ") to navigate to menu item 3. The display F3 should show .
3. Confirm your selection by pressing the "Logo" button again.
4. appears on the display 000.
5. Confirm your entry by pressing the "Logo" button again.
6. The menu is exited automatically, and the display C38 shows . This code requests an initialization.

With an Easy handheld switch

To perform the same function (restore factory settings) using a simple handheld controller that has only "Up" and "Down" buttons, proceed as follows:

1. Press the up and down buttons simultaneously for 10 seconds.
2. If you hear a click after 5 seconds, continue to hold both buttons down without releasing them until the controller clicks again.
3. The controller has now been reset and requires initialization.

Set container and shelf stops

F4

The container stop and shelf stop are safety positions that cannot be passed during normal operation in order to prevent collisions with known, permanently present obstacles. The container stop limits the downward travel height (minimum height) and can be used if there are limiting factors beneath the table, such as a rolling container. The shelf stop limits the table's upward travel. The shelf stop can be used when there are limiting factors above the table, such as a shelf or a sloping ceiling.

To set a container or shelf stop, proceed as follows:

1. Use the arrow buttons (”∧”and ”∨”) to move to the desired position.
2. Follow the instructions to access the hand-held controller menu.
3. Use the arrow keys (”∧”and ”∨”) to navigate to menu item 4. This must be shown F4 on the display.
4. Confirm your selection by pressing the ‘Logo’ button again.
5. The display now shows the following scenarios depending on the position
   a. ooo In this position, you can set the container stop. (The table is currently in the lower half of its travel range.)
   b. ooo In this position, you can set the shelf stop. (The table is currently in the upper half of the travel range.)
   c. --- You cannot set a stop at this position; the table is currently too close to the centre of the travel range.
6. Press the ‘Logo’ button again to save the new position.

Alternatively, wait approx. 10 seconds to cancel the function and return to the menu.

Delete container and shelf stops

F5

To delete a container or shelf stop, proceed as follows:

1. Follow the instructions to access the hand-held controller menu.
2. If necessary, use the arrow keys (”∧”and ”∨”) to navigate to menu item 5. The display should F5 show .
3. Confirm your selection by pressing the ‘Logo’ button again. The display will now show.
4. Now select:
   a. Press ∧ to delete the shelf stop (upper stop). Display: ---
   b. Press ∨ to delete the container stop (lower stop). Display: ___
5. Confirm your selection by pressing the ‘Logo’ button again.

The corresponding stop position will be deleted. Alternatively, wait approx. 10 seconds to cancel the function and return to the menu.

Adjust the sensitivity of the collision protection

F6
F7
F8
F9

The sensitivity can be adjusted separately for the internal collision protection (SCC) and the internal sensor, in each case for both upward and downward travel.

To adjust the sensitivity of the collision protection, proceed as follows:

1. Follow the instructions to access the hand-held controller menu.
2. Use the arrow keys (”∧”and ”∨”) to navigate to

Menu item 6, Display: F6
up for the internal collision protection (SCC) or
menu item 7, Display: F7
for the internal collision protection (SCC) down, or
menu item 8, Display: F8
for the internal sensor, or
menu item 9, Display: F9
for the internal sensor

3. Confirm your selection by pressing the `Logo' button again.
4. Use the arrow keys (and) to adjust the sensitivity displayed in % to the desired percentage: from 0% (OFF) to 99% (very sensitive)
5. Pressing the `Logo' button again saves the displayed value.

Alternatively, wait approx. 10 seconds to cancel the function and return to the menu.

Adjust the speed of the table

To adjust the speed of the table, proceed as follows:
1. Follow the instructions to access the hand-held controller menu.
2. Use the arrow keys (" ∧ "and " ∨ ") to navigate to menu item 10. This must be shown on the display.
3. Confirm your selection by pressing the `Logo' button again.
4. Use the arrow keys (" ∧ "and " ∨ ") to adjust the current speed displayed in mm/s to the desired speed:
   From 20 mm/s (very slow) to 50 mm/s (very fast)
   The available setting range depends on the respective configuration.
5. Pressing the `Logo' button again saves the displayed value.

Alternatively, wait approx. 10 seconds to cancel the function and return to the menu.

Locking function



To protect the table from unauthorised use, the table's movement can be activated or deactivated via the hand-held control unit's menu.

To activate or deactivate the locking function, proceed as follows:
1. Follow the instructions to access the hand-held controller's menu.
2. Use the arrow keys (" ∧ "and " ∨ ") to navigate to menu item 11.
   This must be 

   shown on the display.
3. Confirm your selection by pressing the `Logo' button again.
4. Use the arrow buttons (" ∧ "and " ∨ ") to switch the function on or off:
   A) 

   The table operates normally
   B) 

   The table is deactivated; movement is not possible
5. Press the `Logo' button again to save the setting.

Alternatively, wait approx. 10 seconds to cancel the function and return to the menu.

If the lock function is activated and you then attempt to move the table using one of the UP or DOWN buttons or one of the position buttons 1 to 4, this will be shown on the hand-held controller's display. You can deactivate the lock function using the same menu option.

Maintenance

Warning: Do not open the control unit! Opening the control unit will invalidate any warranty provided by manufacturer.

Danger: If the control unit is opened, there is a risk of electric shock. This risk persists for several minutes after the unit has been disconnected from the mains supply.

Danger: If you notice any faulty cables, disconnect the control unit from the mains immediately. Unplug the mains plug.

Check the plug connections on the control unit regularly to ensure they are secure. Check all cables regularly for faults. If you find any faulty cables, plugs or loose connections, replace the cables. If this is not possible or does not resolve the issue, please contact manufacturer customer service department.

Cleaning and Care

Warning: Harsh cleaning products may cause damage or discolouration to the product. Therefore, only products with a pH value of between 6 and 8 should be used.

The ELEGANT table control unit can be wiped down externally with a soft cloth. Heavy soiling may be removed with a damp, soft cloth. Ensure that no moisture penetrates the housing.

Initialisation / Reset

Before Performing a Reset:

- Ensure that the desk is in its lowest possible position.
- If the display height is higher than the desk's actual height (e.g. after swapping hand switches), carefully lower the desk.

Performing a Reset:

1. Press and hold the "∨" button for 5 seconds. The display shows "rES", and the reset process begins automatically.
2. The columns will slowly move downward to the lowest mechanical position.
3. Once the lowest point is reached, the system will rebound approx. 5 mm and a beep will confirm successful reset.
4. You do need to continue holding the button until the beep is heard.

Never operate the desk if it is not correctly initialized. An incorrect height value may cause the lifting columns to exceed their limits, leading to mechanical damage.

The controller's upper limit stop is preconfigured. Only use control units that are specifically supplied for your desk model.

Optional collision protection is deactivated during the reset process. Be especially cautious and ensure no body parts or objects are within the movement range.

Errors that are easy to rectify

Warning: Before carrying out any troubleshooting, particularly in relation to cables that may be faulty, the control unit must be disconnected from the mains.

If a fault cannot be rectified as described, disconnect the product from the power supply, wait at least 3 minutes and initialise the product as described above. If the fault persists after the initialisation run, disconnect the product from the power supply and contact Customer Services.

Error description	Troubleshooting
The table won't move	• Check that the control unit is receiving power. • Check the connection between the drives and the control unit(s). Re-establish the connections. • Check the load on the table. Reduce the weight on the table. • Operating time limit exceeded. Wait until the table is ready for use again (approx. 3 mins). • Drive faulty: Contact customer service. • Control unit faulty: Contact customer service. • Hand-held controller faulty: Replace the hand-held controller or contact customer service. • Carry out an initialisation run.
The table isn’t moving, but it used to	• The table is tilted: Carry out an initialisation run. • A table leg has become detached: Check all connections and carry out an initialisation run. • The operating time limit has been exceeded: Wait until the table is ready for use again.
The table comes to an abrupt halt	• The operating time limit has been exceeded: Please wait until the table is ready for use again. • Check the load on the table. Reduce the weight on the table. • A container or shelf stop may have been set unintentionally; follow the instructions in section „Delete container and shelf stops” to clear this stop position.
The table stops suddenly and reverses	• The collision protection has been triggered: Remove the obstacle and try again.
The table moves slowly and only downwards	• The table is currently undergoing an initialisation run: Please allow it to run to completion.
The table moves a short distance in one direction only and then stops	• Check the plug connections between the drives and the control unit. Re-establish the connections. • Drive faulty: Contact customer services.
The table moves slowly	• The table is below the safety stop (downwards movement – slow; upwards movement – normal speed): Move the table upwards to exit this area. • Check the load on the table. Reduce the weight on the table.

Acoustic codes

As soon as it is powered up, the control unit can use its built-in relays to inform the user of the current system status.

Number of clicks and taps	When	Status information
1	Power supply (depending on configuration)	Normal operation: The system is operating without any problems. Fault condition: The control unit has no firmware: Only one click is heard.
1	Up key held down	Reset: An initialisation run is required.
1	Lower block position detected	Reset: The table has reached the reset position during the initialisation run. The button ∨ can now be released
3	Sensor fault	Hardware fault The control unit must be replaced. On hand-held controllers with a display, 'C41' is shown at the same time.
7	Engine cable disconnected or missing	Warning: The motor cable is missing when connected to the mains, or has become disconnected during operation. Connect the missing motor cable to the control unit.
7	The table is lopsided	Warning: The table's tilt has become too great. Carry out an initialisation run.

Visual codes

As soon as it is powered up, the control unit can use its built-in relays to inform the user of the current system status.

Displayed code	Description	Resolution	Advertisement by Troubleshooting
	Motor short circuit 1	Unplug the power lead! Rectify the external short circuit, and check the cables leading to the motors for damage. If necessary, replace the motor connected to the affected socket. Put the control system back into operation.	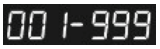 Standard altitude display
	Motor short circuit 2		
	Relay contact is stuck	Replace the control unit.	 An initialisation run is required
	Motor 1 cable disconnected	Check the cables and/or plug connections to the motors	 An initialisation run is required
	Motor 2 cable disconnected		
	Motor 1: no pulses detected	Check the cables leading to the motors for damage and to ensure a secure connection. If necessary, replace the motor at the relevant socket. Put the control system back into operation.	 An initialisation run is required
	Motor 2: no pulses detected		
	The motors have lost synchronisation	Max. load exceeded. Remove the load from the table.	 An initialisation run is required
	Overcurrent on Motor 1	Max. load exceeded. Remove the load from the table.	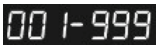 Standard altitude display
	Overcurrent on Motor 2		
	Motor total current too high		
	The motors have lost synchronisation An initialisation run is required	Motor positions are too different. Distribute the load more evenly across the table. If necessary, reduce the load on the table. Carry out an initialisation run.	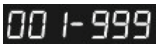 Standard altitude display

Displayed code	Description	Resolution	Advertisement by Troubleshooting
C39	Cascade fault - a controller is not communicating	Check that the STAND.CONNECT connection cable between the control units is correctly connected and that a mains cable is plugged into both control units.	001-999 Standard altitude display
		Use the menu to restore the factory settings in order to reconfigure the device.	C38 An initialisation run is required
C41	Internal sensor faulty	Replace the control unit.	
C51	Conflicting driving instructions	Stop operation on all available hand-held controls or similar devices.	001-999 Normal height display after starting to move in one direction
C52	A button is stuck on the hand-held switch	Replace the hand-held switch	001-999 Standard altitude display
C81	Voltage too low	This may occur after disconnecting the power cable.	001-999 Normal altitude display after power-up
		Power supply faulty; replace the control unit.	C38 An initialisation run is required
C82	Voltage too high	Power supply faulty replace the control unit.	C38 An initialisation run is required
C84	No columns connected when the control unit is switched on	First, connect the required number of columns and hand-held controllers, and then use F3 the menu to restore the factory settings	C38 An initialisation run is required
C85	Number of columns does not match the current configuration	Check the motor cables or use F3 the menu to restore the factory settings.	C38 An initialisation run is required
rEF	Initialisation run is being carried out.	Carry out the initialisation run to the lowest block position	001-999 Standard altitude display

Displayed code	Description	Resolution	Advertisement by Troubleshooting
SP	System Protection / System Pause The operating time of the system has been exceeded	Wait until the control unit has cooled down and the SP display goes blank. The 17-second cycle is then authorised. Only after 18 minutes will the table run again for a full 2 minutes.	001-999 Standard altitude display
SCC	Collision detected via engine hall signals	Remove the obstacle.	001-999 Normal height display after starting to move in one direction
SEn	Collision detected via sensor		
PAr	Parameter error	Use the menu to restore the factory settings. If this does not resolve the fault, the control unit must be replaced or a valid parameter set must be loaded via CON.STAND.	C38 An initialisation run is required
001-999	Table moves, height display	No actions needed.	

Technical Specifications

The technical specifications of the ELEGANT variant:

Rated input voltage	100 – 240 V
Rated input frequency	50 – 60 Hz
Rated input power	max. 370 W
Standby power at rated voltage, primary (typical)	< 0.1 W
Rated output voltage	31 V
Dimensions (L x W x H)	270 x 89 x 38 mm
Weight	0.52 kg
Environmental conditions during transport and storage	-25 °C to +70 °C at 5% to 90% relative humidity (non-condensing), with a maximum dew point of +38 °C; temperatures from +55 °C to +70 °C only for a maximum of 24 hours
Operating environmental conditions:	+5 °C to +40 °C at 10% to 85% relative humidity (non-condensing), with a maximum dew point of +27 °C, <2000 m above sea level
Protection class	II
IP class (protection rating according to EN 60529)	IP 20
MTTFD	>10 years
Max. duty cycle	2 mins ON / 18 mins OFF (after approx. 2 mins OFF, approx. 17 seconds ON are available)
Connections	2x RJ45 sockets 2x 8-pin motor connections 1x power supply (C8)

Ergonomics Guidelines

(Excerpts from BGI 650, DIN ISO 9241)

An ergonomically sound working posture requires that the layout and adjustment of work equipment take into account the user's body measurements. Of essential importance for ergonomic sitting and standing postures are body measurements, grip spaces, fields of view, viewing distances, and movement patterns.

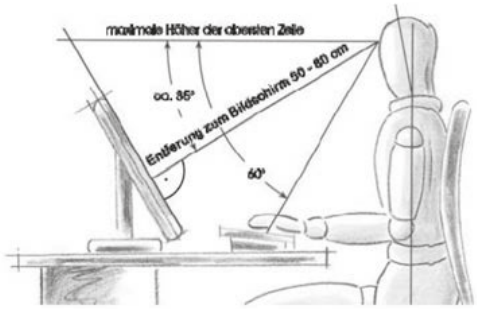

Quelle: Verwaltungsberufgenossenschaft **www.vbg.de**

A proper sitting posture is possible when work equipment is arranged and adjusted so that the upper arms hang loosely and the forearms form a horizontal line at working height. In this position, the upper and lower arms should form an angle of 90° or greater. Furthermore, when the thighs are nearly horizontal thighs and feet placed flat on the floor, the angle between the upper and lower legs should be 90° or greater.

The arrangement of monitors, input devices, work documents, and additional work equipment must be based on the focus of the work tasks. Both visual and manual requirements must be taken into account. Work equipment should be arranged according to the frequency of use. Items used frequently should be placed as centrally as possible within the field of vision and reach, while items used only occasionally should be placed off-center.

The monitor should be positioned so that the viewing distance is at least 50 cm. In addition, the monitor should be tilted backward (max. 35°) so that the screen can be viewed perpendicular to the surface.

Occupational health specialists recommend the following breakdown:

- 50% sitting
- 25% standing
- 25% moving

- Changing posture 2–4 times per hour is recommended
- Frequent, brief periods of standing are better than long periods of standing
- Static standing should be avoided
- Periods of standing should not last longer than 20 minutes

Caution:
Electrically height-adjustable sit- stand desks are subject to the ElektroG and are marked with the symbol. They must not be disposed of with household waste at the end of their service life!
Before disposal, separate the electrical components from the table (control unit, hand-held switch, lifting columns with motors) and dispose of them in an environmentally responsible manner, e.g., through free municipal collection sites.